FIRE BY escea.

Installation Instructions

KWU for EK Series Fires

Escea Freestanding Kitset Unit

For the latest documentation, visit www.escea.com or www.escea.com.au

WARNING
THE APPLIANCE & FLUE SYSTEM SHALL BE INSTALLED IN ACCORDANCE WITH THIS INSTALLATION INSTRUCTION BOOKLET
FOR INSTALLATION DETAILS NOT COVERED IN THIS INSTRUCTION BOOKLET, REFER TO AS/NZS 2918:2001

LEAVE THESE INSTRUCTIONS WITH THE END USER.

Manufactured by: Escea Ltd, PO Box 5277 Dunedin NZ, Ph: +64 3 478 8220

For contact details of your local Escea distributor or dealer, please visit www.escea.com, call 0800 173 000, or email us at info@escea.com.

From Australia, please visit www.escea.com.au, call AU: 1800 460 832 or WA: 1800 730 140, or email us at info@escea.com

WARNING

FAILURE TO FOLLOW THESE INSTRUCTIONS COULD RESULT IN DEATH, SERIOUS BODILY INJURY, AND/OR PROPERTY DAMAGE. FAILURE TO FOLLOW THESE INSTRUCTIONS MAY ALSO VOID YOUR FIRE INSURANCE AND/OR WARRANTY.

A LIT FIRE MUST NEVER BE LEFT UNATTENDED.

THE FIREPLACE MUST ONLY BE USED FOR COOKING/HEATING AS INTENDED.

MAINTAIN AND OPERATE THE FIREPLACE IN ACCORDANCE WITH THESE INSTRUCTIONS.

DO NOT USE FLAMMABLE LIQUIDS OR AEROSOLS TO START OR REKINDLE A FIRE.

DO NOT PLACE ANY COMBUSTIBLES IN FRONT OF THE FIRE AS SOME FIREWOOD MAY SPIT SPARKS.

DO NOT TOUCH THE SURFACES AS THEY CAN BE VERY HOT EVEN AFTER THE FIRE HAS BURNT OUT.

ENSURE CORRECT INSTALLATION AS PER THESE INSTRUCTIONS.

DO NOT MODIFY THE FIRE.

DO NOT OPERATE THE FIRE WITHOUT THE FLUE SYSTEM.

YOUNG CHILDREN SHOULD BE CAREFULLY SUPERVISED WHEN THEY ARE IN THE SAME AREA AS THE COOKING FIRE.

TODDLERS, YOUNG CHILDREN, AND OTHERS MAY BE SUSCEPTIBLE TO ACCIDENTAL CONTACT BURNS AND MUST NOT OPERATE THE COOKING FIRE. A PHYSICAL BARRIER IS RECOMMENDED IF THERE ARE “AT RISK” INDIVIDUALS IN THE VICINITY. TO RESTRICT ACCESS TO A FIREPLACE OR STOVE, INSTALL AN ADJUSTABLE SAFETY GATE TO KEEP TODDLERS, YOUNG CHILDREN, AND OTHER “AT RISK” INDIVIDUALS OUT OF THE AREA AND AWAY FROM HOT SURFACES.

TAKE CARE WHEN INSTALLING TO PREVENT INJURY AS THIS PRODUCT IS HEAVY.

ALWAYS WEAR THE GLOVES PROVIDED WHEN OPERATING THE APPLIANCE.

IMPROPER DISPOSAL OF ASHES MAY RESULT IN FIRES.

CRACKED, BROKEN, EXTENSIVELY CORRODED OR BUCKLED COMPONENTS MAY RENDER THE INSTALLATION UNSAFE.

DO NOT OVER FIRE THE APPLIANCE - FOLLOW FIRE LOADING GUIDELINES.

DO NOT STORE CHEMICALS OR FLAMMABLE MATERIALS NEAR THIS APPLIANCE.

DO NOT SPRAY AEROSOLS NEAR THIS APPLIANCE.

A	**Installation Process and Product Details**	**5**
A1	Product Description	5
A2	Product Dimensions	5
B	**External Clearances to Combustible Surfaces**	**8**
C	**Platform Minimum Requirements**	**9**
D	**Cladding Guide**	**9**
E	**Kitset Assembly**	**11**
E1	Parts Check	11
E2	Base Assembly	12
E3	Firebox Placement	14
E4	Outer frame assembly	15
E5	Cladding Installation	20
E6	Flue system Installation	20
F	**Chimney Maintenance**	**21**
G	**General Warranty Terms and Conditions**	**21**

A Product Details

A1 Product Description

The EK KWU is a standalone frestanding kitset structure to be installed with Escea EK series fires. It may be installed as an alternative to a more traditional structure (using concrete or timber) and will significantly reduce building costs.

The base frame that the fireplace rests on is manufactured from 3mm 304 grade stainless steel, while the outer frame that supports the cladding is manufactured from 1.55mm galvanised carbon steel.

A2 Product Dimensions

There are three sizes in the EK series- 950, 1250 and 1550. There is a specified kitset for each size of firebox. Please ensure that the correct size kitset for the fire is onsite before commencing the installation. Confirm this using the quality control sheet attached to the product's packaging.
For more detail, view the EK KWU kitset design guide at www.escea.com

Product dimensions are as follows:

EK950 KWU

Appliance and KWU frame weight: 400 KG

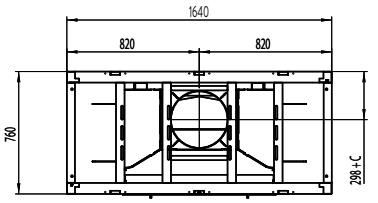

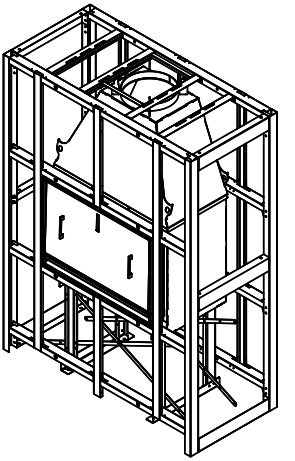

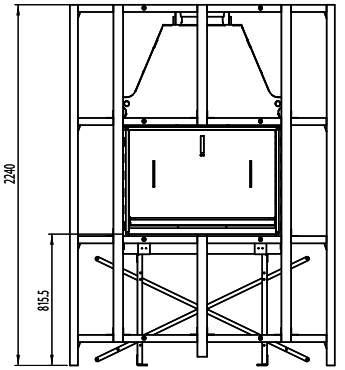

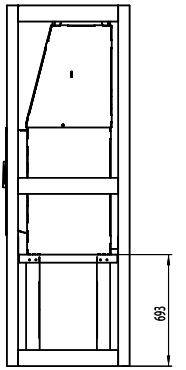

EK1250 KWU

Appliance and KWU frame weight: 485 KG

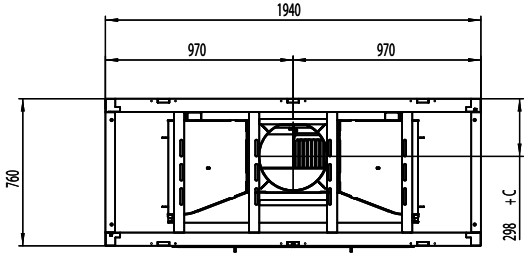

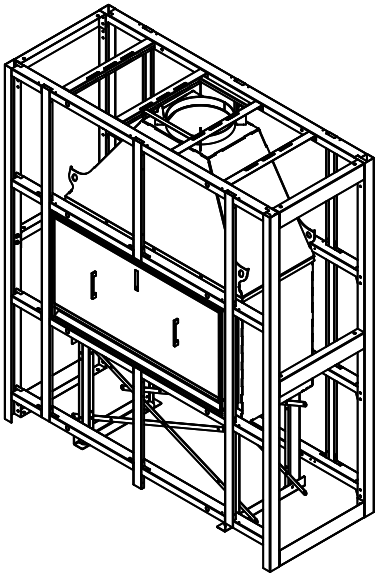

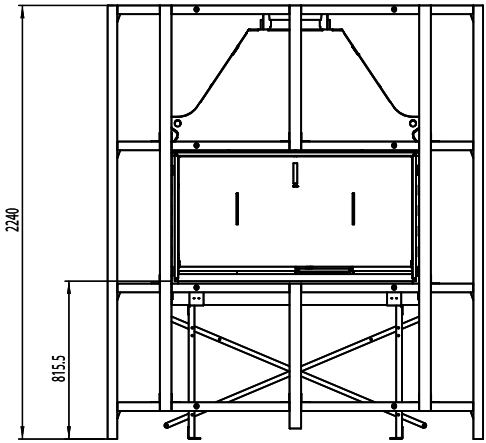

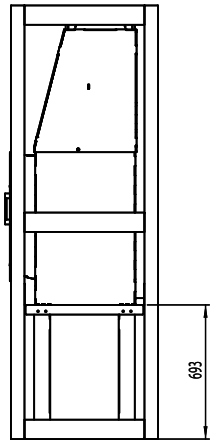

EK1550 KWU

Appliance and KWU frame weight: 560 KG

Note: The EK 1550 requires two flues to function properly- ***this is mandatory***

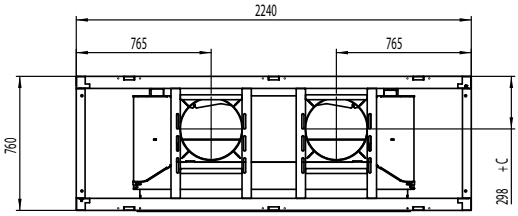

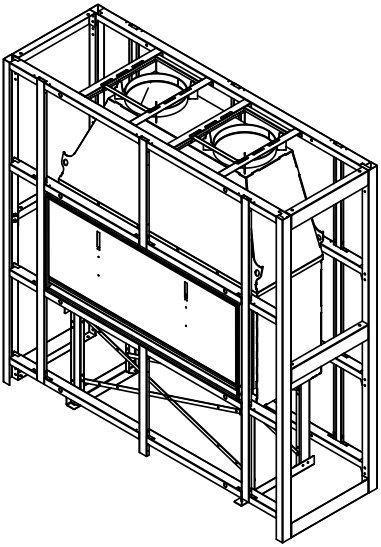

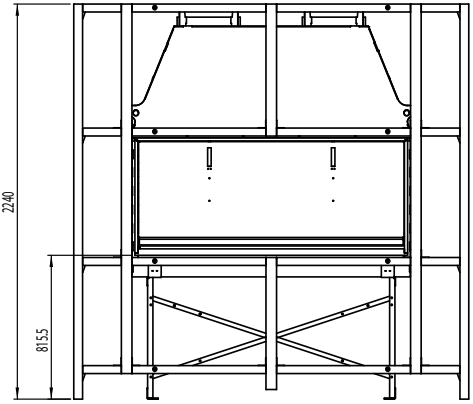

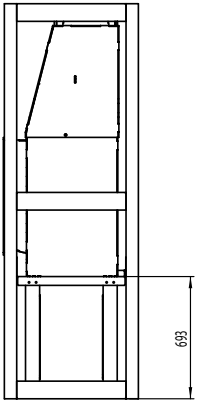

B External Clearances to Combustible Surfaces

SIDE VIEW

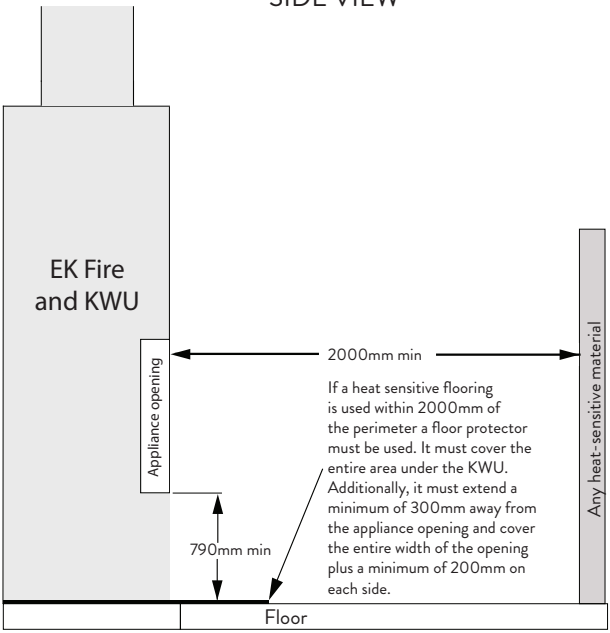

TOP VIEW

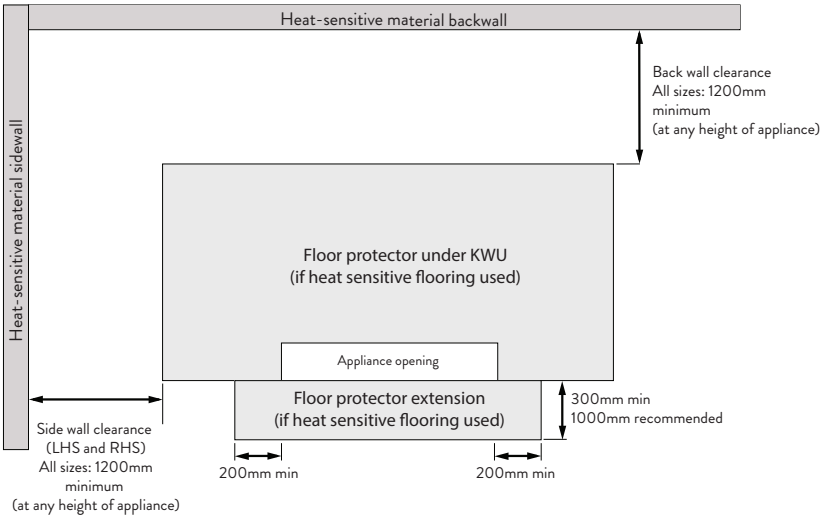

C Platform Minimum Requirements

The kitset structure is required to be mechanically fixed into a flat, uniform concrete pad or other suitable non combustible substrate using M10 x 100mm bolts (or stronger depending on cladding choice). If concrete is the substrate, use concrete anchors or dynabolts. Suitable seismic restraint for the appliance into the substrate must be ensured, according to the requirements of AS/NZS 2918:2001. The combined weight of the appliance, frame, flue system and cladding, must be taken into account.

D Cladding Guide

The KWU is a template for any practical cladding of the customer's choice. It is recommended to read this section before commencing the installation.

Cladding requirements
The applied cladding must be non-combustible. Cladding is require to provide weather resistance to the KWU structure.

Cladding placement
There are two options for the front interface between the appliance opening and the cladding outer surface. EK series fires have a small front flange around the opening which the cladding can sit directly behind. Alternatively, the firebox can be recessed into the cavity opening. *Note: it is important to consider these options and the thickness of cladding used before placing the firebox onto the base frame.*

Scenario A: Cladding behind the firebox flange

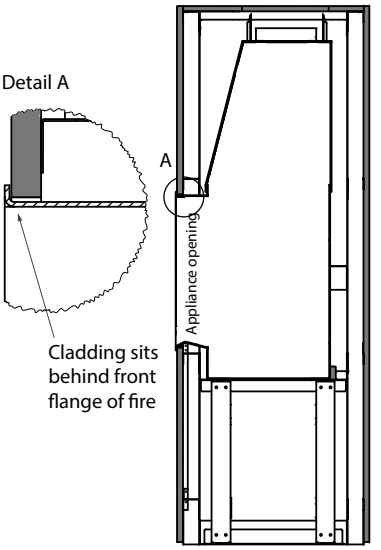

Note: The maximum cladding thickness for this scenario is 50mm.

Scenario B: Firebox recessed into cladding

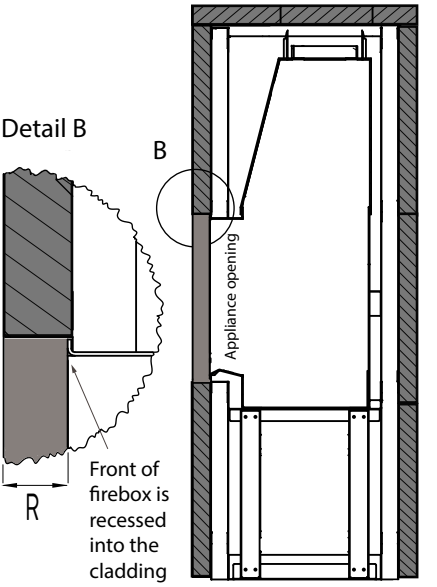

Note: The recess R is the thickness of the cladding minus 4mm. If a smaller recess is desired, a packer (made of non-combustible material) can be placed at the back of the firebox to offset it forward.

Venting requirements
The clad structure must be vented in and out of the cavity. The vents can be any size or shape, provided that the total combined area is at least 35,300mm^2 (eg. 2x 150mm dia vents). The vents may be placed either on the back panel or the side panels, within 300mm of the ground. Symmetry in venting orientation is preferable.

The air inside the cavity must exit the structure between the 350mm flue and 450mm liner. Allow for the 50mm gap all around the flue when cutting the cladding top panels.

Weatherproofing requirements
The cladding must be installed such that it protects the interior of the frame structure. Ensure to seal all joints between cladding panels with a high temperature silicon sealant.

Refer to the chosen cladding manufacturer's requirements/ installation guidefor more details.

Surfaces in contact with the ground must be covered with a damp proof course (eg. Malthoid).

Additionally, there must be a minimum 5mm gap between any cladding material and the ground to reduce ground moisture absorption into the cladding material. This gap can be sealed with a high temperature silicon sealant.

If concerned about corrosion of the galvanised outer frame structure, cover the parts where neccesary with a galv touch up (eg CRC Galv Touch Up) or other suitable corrosion resistant paint.

The clad structure must have a top or cap flashing to ensure that the structure is weather proof.

Top or Cap Flashing options
There are multiple options for flashing the KWU. Escea provides an optional accessory flashing plate (550x550mm plate with 450 OD upstand) which can be screwed into the top cladding material. Alternatively, the customer may choose to flash the entire top surface.

All gaps between flashings and cladding material should be sealed using a high temperature silicon sealant (able to withstand at least 200°C).

E Kitset Assembly

E1 Parts Check

Check that the following parts are included with your kitset size before starting the assembly.

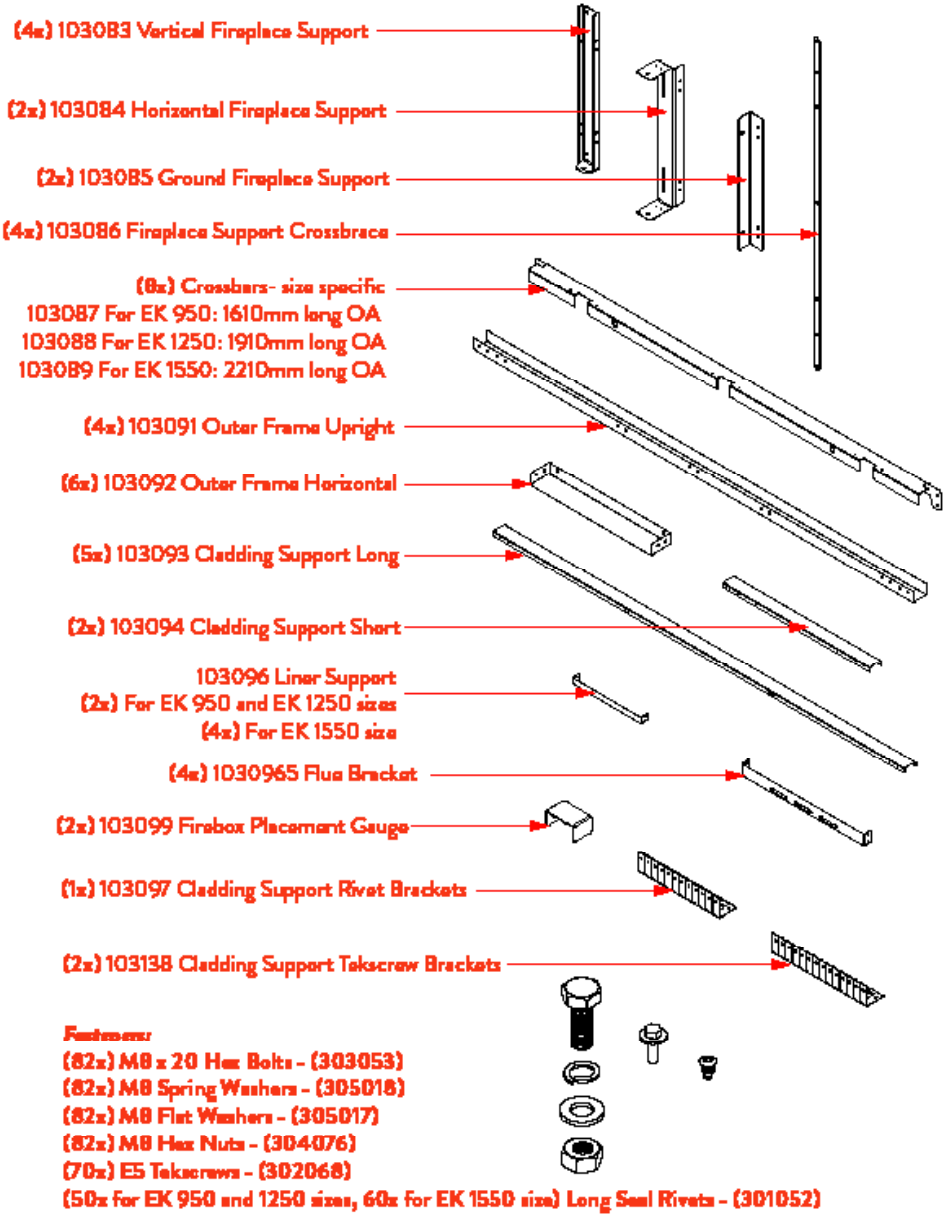

E2 Base Assembly

1. Assemble the 2x stainless steel trusses that make up the frame of the base. The sections bolt together using M8 x 20 bolts, nuts, flat washers and spring washers.

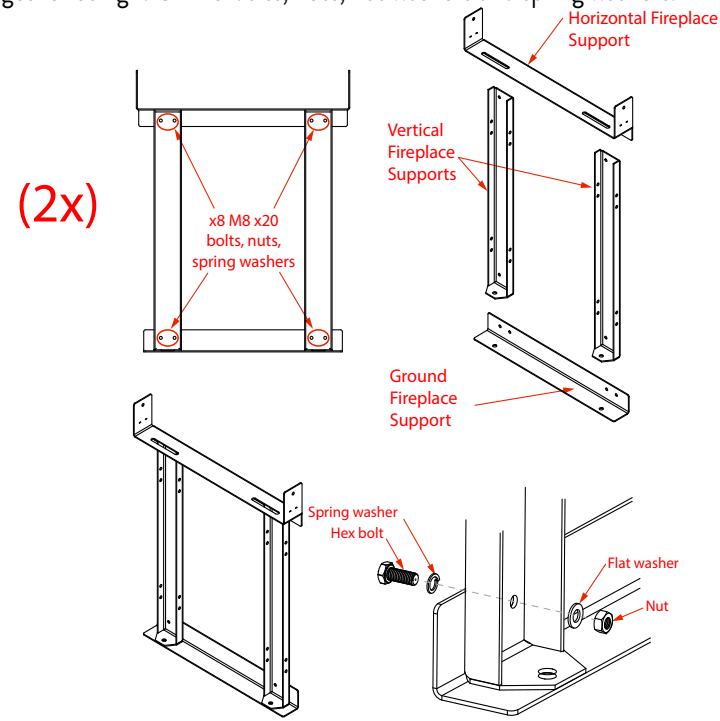

*Assemble all nuts/ bolts/ washers in this manner

2. Bolt one truss assembly into the ground in the desired location, using M10 concrete screws or equivalent. The drawing below serves as a guide for the location of the trusses with respect to the outer perimeter of the structure. Note: it is recommended to mark out the ground bolt locations as a guide for later assembly.

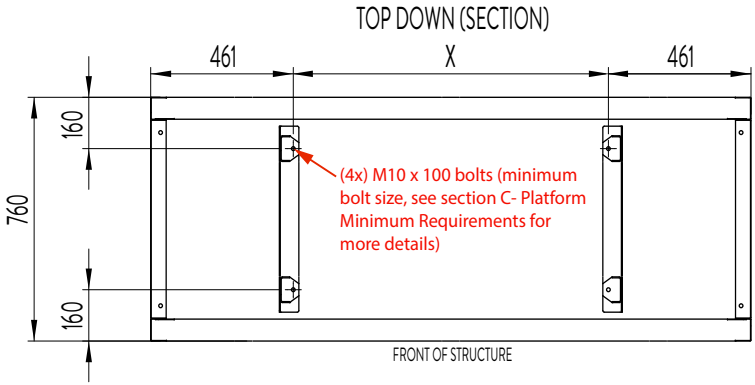

		EK 950	EK 1250	EK 1550
Distance between bolt locations	X (mm)	718	1018	1318

3. Construct the rest of the base assembly as shown below using M8 bolts, nuts and spring washers. The crossbraces bolt to the inside faces of the trusses, shown below in the finished construction state. The crossbraces are generic and are built to suit all 3 sizes of firebox. Bolt through the corresponding holes as shown for each size.

Note: It is recommended to bolt the ends of the crossbraces to the frame first, before bolting through the middles of the crossbraces.

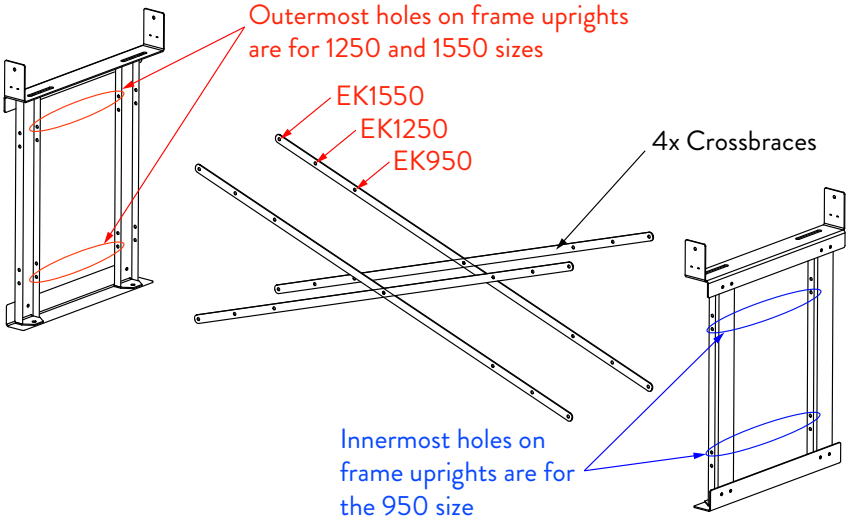

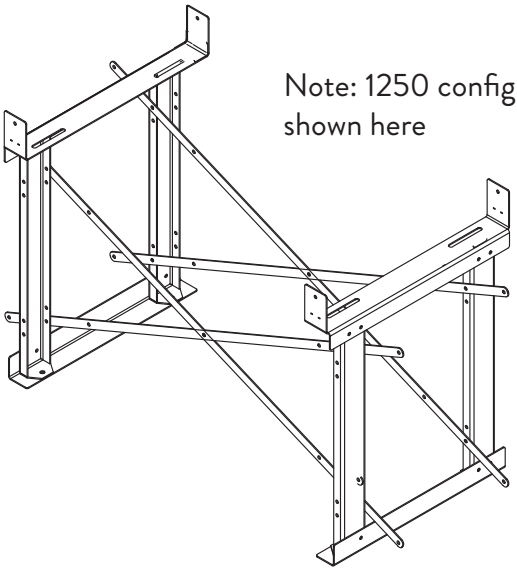

4. Once the base is assembled, use the ground bolting locations to bolt the remaining truss into the ground (using the marked hole locations as a guide).

E3 Firebox placement

After determining the cladding choice and desired cladding scenario (see cladding guide on page 9), the firebox can be placed onto the base structure. Included in the kitset are two 'firebox placement gauges' that slot into the upflanges on the base structure. These c-sections locate the firebox to the outer frame of the structure (assembled later).

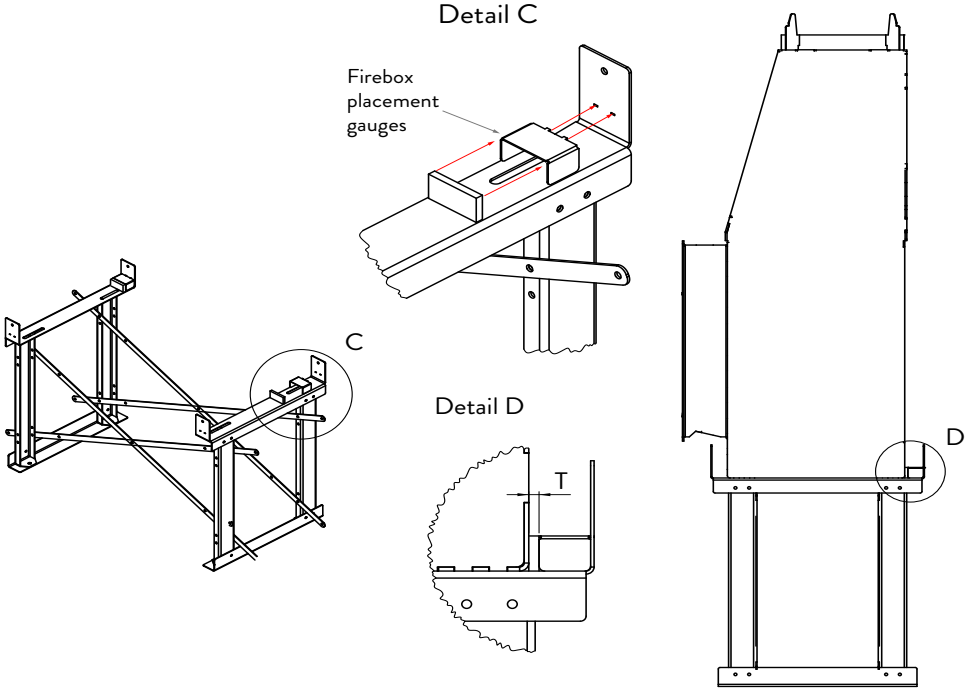

If following Scenario A shown in the cladding guide on page 9, place the 'firebox placement gauges' as shown above, plus a packer (must be non-combustible) of the same thickness as the cladding material. If following Scenario B shown in the cladding guide, the thickness of the packer represents the desired subtraction of the front recess from the thickness of the cladding material.

Lift the firebox onto the base frame (either with 4 person lift or using a HIAB truck) and shunt it to the back against the cladding packers. There are slots cut into the top surface of the frame which the firebox bolts go through. Bolt the firebox to the base frame using M10 bolts/ nuts. The bolt holes in the firebox can be accessed by lifting up the 'pivot drawer' (see the EK firebox manual for more details).

E4 Outer frame assembly

1. Assemble the 2x 'outer frame trusses' as shown below. The trusses bolt together using supplied M8 x 20 bolts, nuts and spring washers. *Note: the bolts for the bottom two horizontal pieces can be tightened, but keep the bolts for the top horizontal piece (position 4) fingertight.*

Note: the 'outer frame trusses' shown here are in their installed orientation. It is useful to lay them down flat to bolt them together.

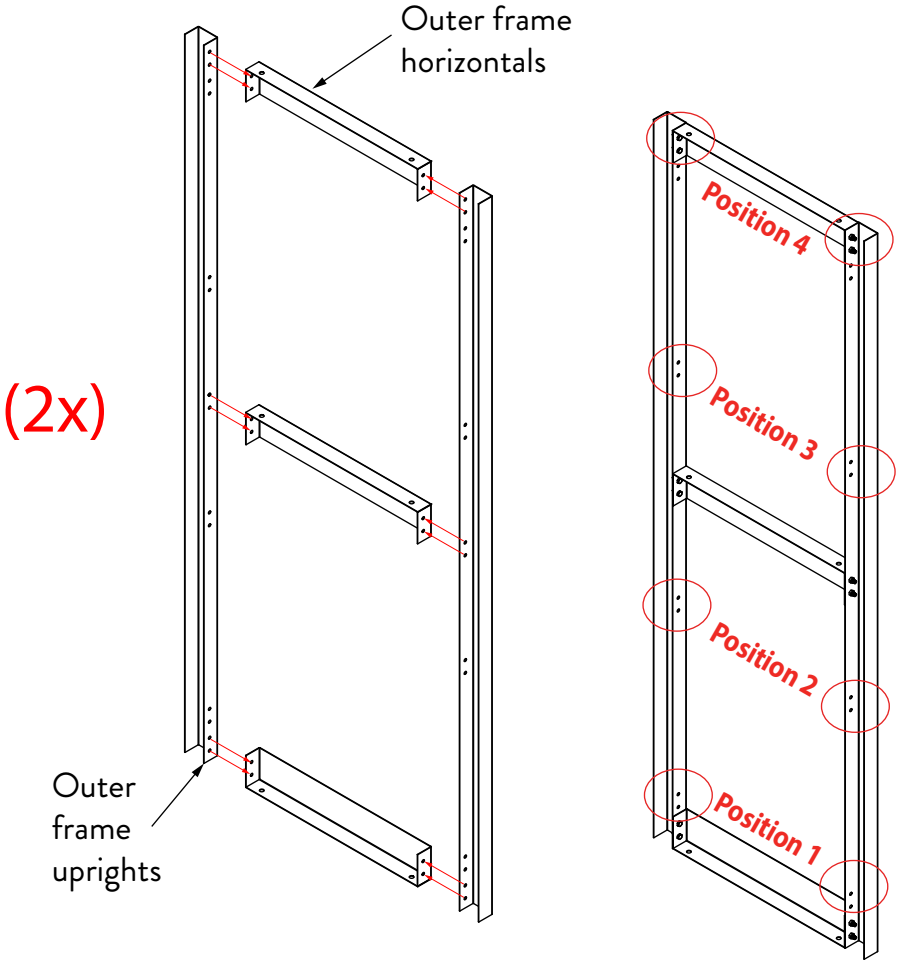

The bottom surface of the outer frame trusses (which will be in contact with the ground) should sit on a damp proof course (eg. Malthoid).

2. Assemble the outer frame with the crossbars and the preassembled outer frame trusses as shown in the following steps:

Step 2a: Bolt 2x of the crossbars to the base assembly (on which the fireplace sits) as shown.

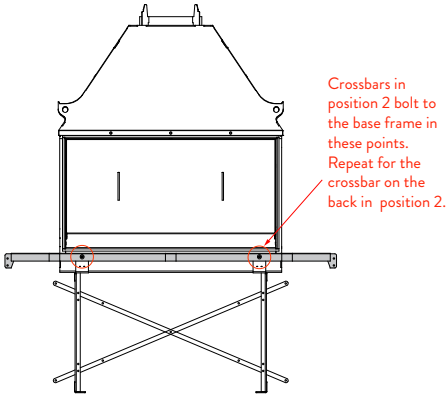

Step 2b: Bring together the preassembled outer frame trusses and bolt through the crossbar holes in position 2 to secure them in place.

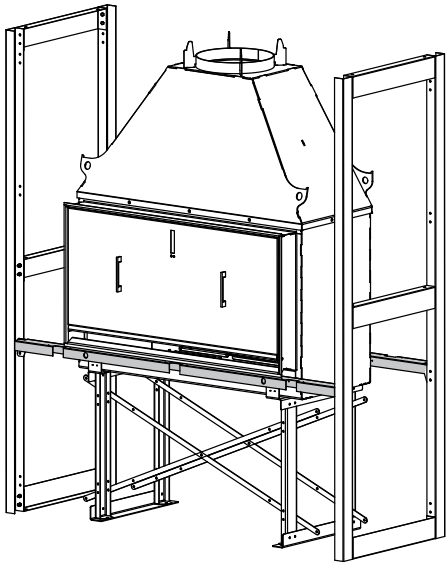

Step 2c: Attach a further two crossbars in position 3- to the outer frame trusses

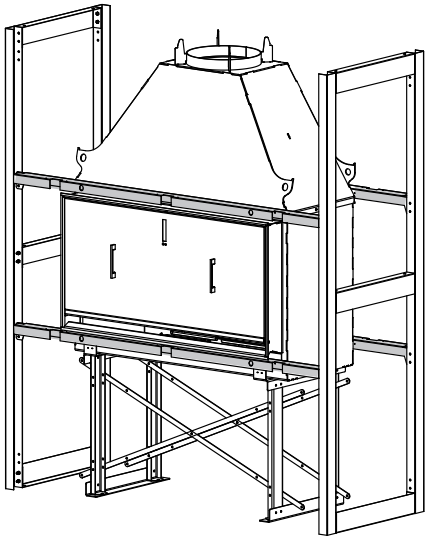

Step 2d: Attach the two crossbars in position 1

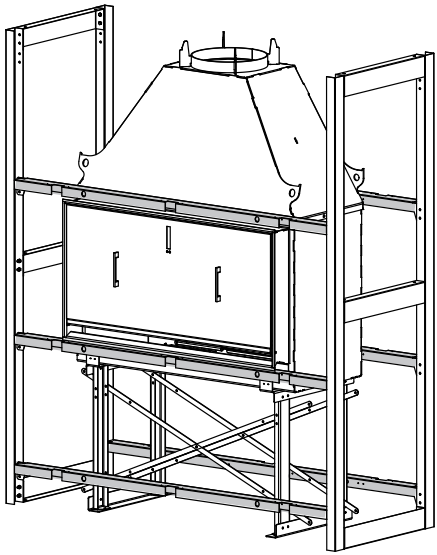

Step 2e: Attach the final two crossbars in position 4. Note: these top crossbars bolt through the same points as the top most frame horizontal in the outer frame trusses.

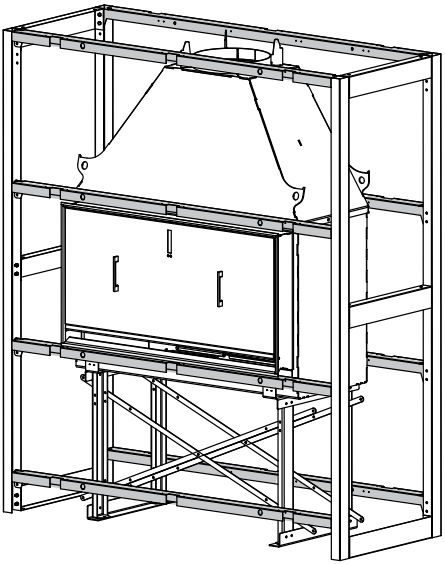

Notes:

The flat surface of each truss faces outwards (as the cladding will adhere to this surface).

The three rectangular cutouts in the crossbars face outwards. Bolt the crossbars such that there is a flush cladding face all around the structure.

3. Secure the 'cladding support' c-sections onto the assembled frame. There are 5 long cladding support sections, three of which go on the back of the structure. The remaining two go on each side of the firebox opening. The cladding supports screw and rivet to the inside faces of the crossbars with the aid of right-angled brackets (supplied). There are a further two shorter cladding supports which go above and below the mid-point of the firebox opening. The view below shows the location of the cladding supports (shaded).

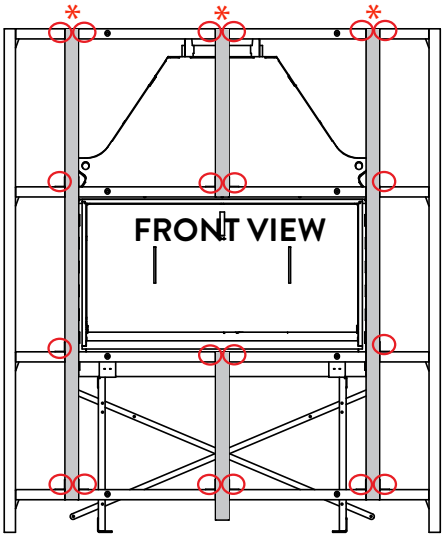

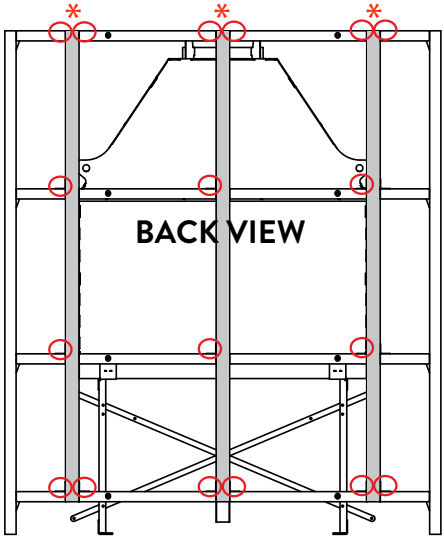

The supplied right-angled brackets are gang-folded and need to be broken up by hand.

The above image shows locations of the brackets. There are two types of brackets. The brackets with 5mm holes in them screw into the cladding supports in the locations encircled in red above, using supplied E5 tekscrews. Use a 1/4" socket to drive in the tekscrews.

The brackets with smaller 3.3mm holes (these brackets also have small notches in them to identify them) rivet in the locations encircled with an asterisk * (above). This is to minimise material protruding from the top of the structure upon which cladding will sit.

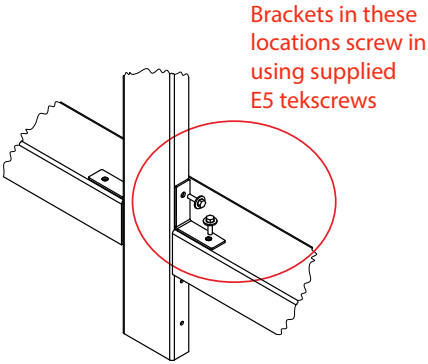

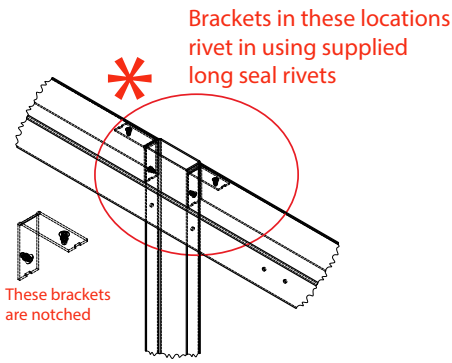

4. Place the flue(s) (supplied in the Escea flue kit) on the firebox spigot. Now assemble the 'flue supports' by riveting them to the top crossbars as shown below. Drill and rivet through the applicable hole in the flue support bracket to secure the flue to the structure. *Note: for added strength the flue can be riveted to the firebox spigot as well.*

Additionally, rivet in the liner supports to the flue supports (as per below). The location of these supports needs to be such that they provide adequate support to the cladding upon which the liner(s) will sit. However they also need to be spaced off from the flue (50mm min) to ensure cavity air exits between the flue and liner.

Note: there are two additional flue supports supplied with the EK 950 and EK 1250 kitsets that are to support the top cladding panels. These also rivet into the crossbars (see below).

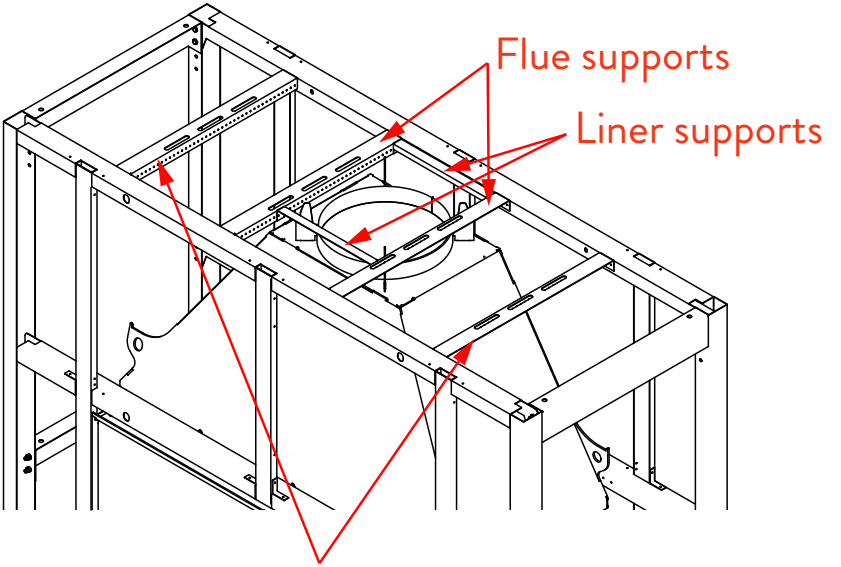

Note: flue not shown in this view

5. The outer frame should now be bolted into the ground using a further 4x M10x100 bolts (concrete screws or dynabolts or equivalent). Note: It is recommended to prepare the cladding for the front face before bolting the frame into the ground, the ensure that a clean interface at the firebox opening can be achieved.

E5 Cladding Installation

After securing the first length of flue (as outlined in section E3.4 above), and bolting the outer frame into the ground, the structure is ready to be clad.

The cladding installation must adhere to the requirements of Section D: Cladding Guide within this document, and the cladding manufacturer's specifications and requirements.

E6 Flue System Installation

Flue system requirements

The EK KWU product must be installed using Escea branded flue.

The product must be installed with an Escea 350 Cowl, Escea 350 flashing cone and Escea spider to ensure that the flue system is waterproof.

Note: Given here is a recommended flue system installation, including the Escea EK series 350-450 flue kit and the optional EK KWU flashing plate. The flue kit comes with 2x 1200mm lengths of flue and liners as standard. However, the product can be installed with 1x 1200mm length of flue (with a liner), depending on the customer's preferences.

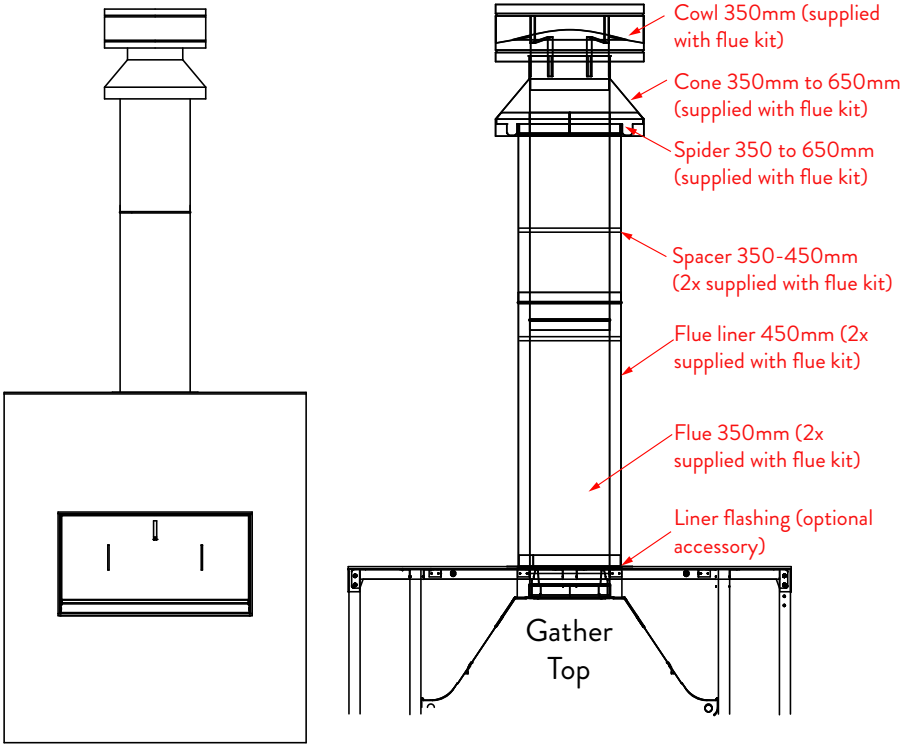

F Chimney Maintenance

The chimney must be inspected & cleaned at least once per year.

A chimney fire can permanently damage your chimney system; this damage can only be repaired by replacing the damaged component parts.

Chimney fires are not covered by the warranty.

G General Warranty Terms and Conditions

General Information

This quality manufactured product is state of the art. The materials used were meticulously selected and are constantly checked, as is our entire production process.

Setting up or installing this product requires specialised knowledge. Escea products may therefore only be installed and commissioned by specialised firms and in compliance with the instructions detailed in this installation document.

Warranty Conditions for Escea Outdoor Wood Fires

This warranty is provided by Escea Limited (referred to in this document as Escea). The warranty applies from the date of purchase from or through an authorised Escea dealer.

Nature of Warranty

Parts	Parts and Labour Warranty
All steel components	5 years*

* From date of purchase

** Failure is considered a physical crack or hole that stops the product functioning as it is designed to.

Escea must pre-authorise all warranty work.

The benefits provided under this warranty are in addition to the consumer guarantees and any other statutory rights you may have under the consumer law and/or other applicable laws.

Warranty Exclusions

This warranty does not apply and will be void where:

The Escea Outdoor Wood Fire is not installed in accordance with AS/NZS 2918:2001.

The Escea Outdoor Wood Fire or EK KWU has not been installed or operated in accordance to the Escea Outdoor Wood Fire and EK KWU installation manuals respectively: in particular, defects, malfunctions or failures caused by incorrect installation, normal wear and tear, misuse, neglect, lack of proper and regular maintenance, accidental damage, any other alteration, or failure to follow operating instructions in the installation manual or any misuse that causes an overfired situation

resulting in heat damage.

The use of products, including flue systems, that are not specified in accordance with the installation manual.

Repairs or modifications by persons not authorised by Escea, use of parts not supplied by Escea, or damage or other events which have occurred since the product left the control of Escea.

Any scratches, dints, finger print marks, and melted items that occurred after the arrival of the product to the Escea Dealer.

Discolouration of the enamel, galvanized surfaces, or glass caused by soiling by soot or built-in residues of burnt materials as well as visibly changed colour or other aspects due to thermal stress or overloading.

Changes in the interior / exterior surfaces of the house, fire, or flue (e.g. any staining or soot / smoke damage, cracking, discoloration or degradation of surfaces caused by thermal stress or overloading).

Damage caused by abnormally corrosive environments (e.g. sea salt corrosion).

Escea wood fires are coated with high temperature paint that may show signs of surface rust if exposed to moisture for an extended period of time. Any repair and replacements of parts that are subject to normal wear and tear expected with any outdoor fire product. Any rust damage discolouration or corrosion in any part of the fire over life of the fire is not covered by warranty.

Damage caused by water affecting the Escea outdoor wood fire.

Operation of the Escea outdoor wood fire without its back panels (if applicable).

Damage caused by chimney fires.

Escea is not responsible for defects in cladding materials.

Subject to any statutory provisions to the contrary, at Escea's discretion, Escea's liability in respect of EK Series products that are found to have manufacturing defects will be limited to refunding, repairing, or replacing the defective products. The reinstatement and replacement of any affected outside wall, ceiling, or floor coverings, coatings, or claddings are not covered by warranty. Escea does not accept liability for consequential damage or any incidental expenses resulting directly or indirectly from any defect or breach of warranty, claims for damage to building or any other consequential loss.

Other Escea Outdoor Product Warranty Conditions

No dealer, distributor, or similar person has the authority to warrant Escea products beyond the terms contained in this warranty.

This warranty is automatically voided if the appliance's serial number has been removed or altered in any way.

Any differences in product appearance from Escea promotional images that is due to printing limitations, environmental factors, or wood variations are not a warranty issue.

Where you make a claim under this warranty, an authorised repairer may need to attend your premises to inspect the Escea product. Escea may charge you a service call fee if a repairer will be required to travel more than 30 km from the nearest service centre to your location. You can obtain details on the location of service centres and service call fees by visiting the Escea website or calling the customer care line below.

Warranty Claims

If you make a valid claim under warranty and none of the exclusions set out in section 2 and 3 apply, Escea will, at Escea's election either:

Repair the relevant part of the Escea product; or

Replace the relevant part of the Escea product with a product of identical specification (or where the product is superseded or no longer in stock, with a product of as close a specification as possible).

How to Make a Warranty Claim

To make a valid claim under this warranty, you must:

- Lodge the claim through the dealer who supplied the fire, as soon as you first become aware of the breakdown. The Escea Dealer will then follow Escea's warranty claim process.
- Provide the Escea product serial number.
- Provide reasonable proof of purchase for the Escea product.
- If required, provide access to the premises at which the Escea product is located (so it can be inspected).

Regions	Escea Distributors	Filing a Claim
Australia	Escea Australia PTY Ltd. P.O. Box 176 Pennant Hills, 1715, Sydney, NSW AU: 1800 460 832 or WA: 1800 730 140 www.escea.com.au	Visit the distributor website or call distributor directly.
New Zealand	Escea Ltd. 17 Carnforth Street Dunedin, 9018, New Zealand 0800 17 3000 www.escea.com	Contact the dealer you purchased the fire from

Contact the dealer you purchased the fire from to file a claim.

This document contains technical data subject to change without notice.