ADHERE SERIAL LABEL

Mode KB1150, KB1400, and KB1650

GAS FIREPLACE

Installation Instructions

WARNING: REFER TO THE WARNING ON PAGE 1 AND THE WALL LINING INSTRUCTIONS IN SECTIONS B5 ON PAGE 11 AND F9 ON PAGE 50. FAILURE TO FOLLOW THESE INSTRUCTIONS MAY RESULT IN A FIRE.

MODE

630815_2

IMPORTANT:

The appliance shall be installed in accordance with;

- This installation instruction booklet
- Local gas fitting regulations
- Municipal building codes
- Electrical wiring regulations
- Any other relevant statutory regulations.
- AS/NZS 5601.1 Gas Installations

WARNING!

DO NOT MODIFY THIS APPLIANCE.

THIS APPLIANCE MUST BE INSTALLED INTO A CAVITY STRICTLY IN ACCORDANCE WITH THE FOLLOWING INSTRUCTIONS.

DO NOT USE OR STORE AEROSOLS OR FLAMMABLE MATERIALS IN OR NEAR THIS APPLIANCE.

DO NOT PLACE ARTICLES ON OR AGAINST THIS APPLIANCE.

This appliance is not intended for use by young children or infirm persons unless they are adequately supervised by a responsible person to ensure that they can use the appliance safely.

Failure to follow these instructions could cause a malfunction of the heater, which could result in death, serious bodily injury, and/or property damage. Failure to follow these instructions may also void your fire insurance and/or warranty.

Who can install this product:

Installation must be carried out by a registered installer who, on completion, must issue:

AUS- A Certificate of Compliance

NZ- Certificates that comply with the latest legislation in accordance with national and/or local codes. If these are not issued then the Escea warranty may be void.

Warranty Repair and Annual Servicing:

Please contact Escea if you require warranty work. Warranty repair work must be carried out by a recognised Escea Gas Fire Technician. To progress any warranty claims for damaged appliances/parts, photographic evidence may be required. Providing this can help contribute to a timelier resolution of a claim.

It is recommended that recognised Escea Gas Fire Technicians are also used to carry out annual servicing requirements (particularly during the warranty period). For contact details of recognised Escea Gas Fire Technicians in your area, or for replacement parts, please contact the retailer from whom the appliance was purchased our visit our website.

The heater must be installed according to these instructions and in compliance with all relevant building, gas fitting, electrical, and other statutory regulations (e.g.. AS/NZS 5601). Any shortcomings in the appliance and flue installation will be the responsibility of the installer and Escea will not be accountable for any such failings or their consequences.

Manufactured by: Escea Ltd, PO Box 5277, Dunedin, NZ

For contact details of your local Escea distributor, email info@escea.com or for:
NZ- www.escea.com or call: +64 3 478 8220
AU- www.escea.com.au or call: 1-800 460 832

MODE KB1150 PRODUCT SPECIFICATION				
MODEL NAME		KB1150		
Description of Appliance		Indoor Gas Fire Heater		
Star Rating		4.4 Stars		
Max Heat Output		8.2 kW		
Compliant To		AS/NZS 5263.1.3		
Gas Type		Natural	Propane	ULPG
Gas Input	High	34 MJ/hr	34 MJ/hr	34 MJ/hr
	Low	25 MJ/hr	25 MJ/hr	25 MJ/hr
Inlet Pressure	Max	5 kPa	5 kPa	5 kPa
	Min	1.13 kPa	2.75 kPa	2.75 kPa
Operating Pressure	High	0.78 kPa	1.8 kPa	1.8 kPa
	Low	0.30 kPa	0.90 kPa	0.90 kPa
Burner Jet Size	LH & RH	1.50 mm	0.85 mm	0.85 mm
	Middle	1.95 mm	1.30 mm	1.30 mm
Burner Aeration	LH & RH	Closed	2 x 4 mm	2 x 7 mm
	Middle	1 x 3.5 mm	2 x 12 mm	Spacer (Open)
Pilot Injector		#37	#27	#27
Product Dimensions	Width	1401 mm		
	Height	794 mm		
	Depth	379 mm		
Weight		116 kg		
Ignition System		Electronic Ignition to pilot system		
		Escea PCB		
Ignition Activation		20 secs (approx)		
Flame Safeguard		Flame Rectification		
Consumption		160 W @ 0.69 A 230 V		
Remote Controls		Yes		
Timers		Yes (App and Internet connection compulsory)		
Clock		No		
Function Lock / child		No		
Temperature Control		Yes		
Connections	Electric	230 V AC		
	Gas	1/2" BSPT female lower centre of fireplace chassis		
	Flue Type	Aluminium Flexi Flue		
	Flue Size (ID)	75 mm and 100 mm Flexi Flue and PolyPro		
	Spigot Location	Top RH side		
Data Badge Location		On chassis base		

MODE KB1400 PRODUCT SPECIFICATION				
MODEL NAME		KB1400		
Description of Appliance		Indoor Gas Fire Heater		
Star Rating		5.1 Stars		
Max Heat Output		9.7 kW		
Compliant To		AS/NZS 5263.1.3		
Gas Type		Natural	Propane	ULPG
Gas Input	High	40 MJ/hr	40 MJ/hr	37 MJ/hr
	Low	30 MJ/hr	28 MJ/hr	28 MJ/hr
Inlet Pressure	Max	5 kPa	5 kPa	5 kPa
	Min	1.13 kPa	2.75 kPa	2.75 kPa
Operating Pressure	High	0.82 kPa	1.98 kPa	1.68 kPa
	Low	0.40 kPa	0.93 kPa	1.04 kPa
Burner Jet Size	LH & RH	1.70 mm	1.02 mm	1.02 mm
	Middle	1.95 mm	1.30 mm	1.25 mm
Burner Aeration	LH & RH	1 x 3.5 mm	2 x 7 mm	2 x 8 mm
	Middle	1 x 6 mm	2 x 13 mm	Spacer (Open)
Pilot Injector		#37	#27	#27
Product Dimensions	Width	1693 mm		
	Height	794 mm		
	Depth	379 mm		
Weight		135 kg		
Ignition System		Electronic Ignition to pilot system		
		Escea PCB		
Ignition Activation		20 secs (approx)		
Flame Safeguard		Flame Rectification		
Consumption		160 W @ 0.69 A 230 V		
Remote Controls		Yes		
Timers		Yes (App and Internet connection compulsory)		
Clock		No		
Function Lock / child		No		
Temperature Control		Yes		
Connections	Electric	230 V AC		
	Gas	1/2" BSPT female lower centre of fireplace chassis		
	Flue Type	Aluminium Flexi Flue		
	Flue Size (ID)	75 mm and 100 mm Flexi Flue and PolyPro		
	Spigot Location	Top RH side		
Data Badge Location		On chassis base		

MODE KB1650 PRODUCT SPECIFICATION				
MODEL NAME		KB1650		
Description of Appliance		Indoor Gas Fire Heater		
Star Rating		5.0 Stars		
Max Heat Output		10.2 kW		
Compliant To		AS/NZS 5263.1.3		
Gas Type		Natural	Propane	ULPG
Gas Input	High	44 MJ/hr	40 MJ/hr	40 MJ/hr
	Low	32 MJ/hr	28 MJ/hr	28 MJ/hr
Inlet Pressure	Max	5.00 kPa	5.00 kPa	5.00 kPa
	Min	1.13 kPa	2.75 kPa	2.75 kPa
Operating Pressure	High	0.67 kPa	1.67 kPa	1.67 kPa
	Low	0.34 kPa	0.82 kPa	0.82 kPa
Burner Jet Size	LH & RH	2.10 mm	1.10 mm	1.10 mm
	Middle	2.10 mm	1.20 mm	1.20 mm
Burner Aeration	LH & RH	Coals/Crystalite: Closed All Logs : 1 x 3.5 mm	2 x 4 mm	2 x 7 mm
	Middle	Coals/Crystalite: Closed All Logs : 1 x 3.5 mm	2 x 12 mm	Spacer (Open)
Pilot Injector		#37	#27	#27
Product Dimensions	Width	1987 mm		
	Height	794 mm		
	Depth	379 mm		
Weight		158 kg		
Ignition System		Electronic Ignition to pilot system		
		Escea PCB		
Ignition Activation		20 secs (approx)		
Flame Safeguard		Flame Rectification		
Consumption		160 W @ 0.69 A 230 V		
Remote Controls		Yes		
Timers		Yes (App and Internet connection compulsory)		
Clock		No		
Function Lock / child		No		
Temperature Control		Yes		
Connections	Electric	230 V AC		
	Gas	1/2" BSPT female lower centre of fireplace chassis		
	Flue Type	Aluminium Flexi Flue		
	Flue Size (ID)	75 mm and 100 mm Flexi Flue and PolyPro		
	Spigot Location	Top RH side		
Data Badge Location		On chassis base		

CONTENTS

A Product Description and Dimensions **8**

A1 Product Description 8
A2 Recommended Install Process 8
A3 Mode KB1150 and KB1400 Product Dimensions 8

B Creating the Cavity **10**

B1 Cavity Shape 10
B2 Designing the Cavity 10
B3 Hearth 11
B4 Cavity Base 11
B5 Wall Lining 11
B6 Television & Mantel Clearances 11

C Installing the Flue **12**

C1 Flue Configuration (If less than 8m flue length is required) 12
C2 Flue Configuration (If more than 8m flue length is required) 13
C3 Installing the Horizontal Powerflue Wall Terminal Option 14
C4 Installing the External Universal Vertical Powerflue (UVP) 17
C5 Installing the Internal Vertical Powerflue (UVP) 18
C6 Installing in Accordance with Relevant Codes 20
C7 Running the Flue 21
C8 Running the Powerflue Electrical Cable 22

D Installing the Electricity and Gas to the Appliance **23**

D1 Power Supply 23
D2 Pairing Fireplace to Escea Smart Heat App 23
D3 Home automation setup (optional) 24
D4 Gas Supply 25
D5 Gas Pipe Sizing 25
D6 Gas Pipe Position 25
D7 Gas Isolating Valve 26

E Installing the Appliance **27**

E1 Connecting the Flue 27
E2 Installation 27
E3 Removing (and Replacing) the Glass 27
E4 Removing (and Replacing) the Infill & Burners 28
E5 Checking the Gas Operating Pressure 28
E6 Gas Type Conversion 31
E7 Auxiliary On/Off button 34

E8 Home Automation Setup- Optional 34

F Finishing the Installation 36

F1 Log and Woodland Log Fuelbed Retainer Setup 36
F2 Log Fuelbed Installation 37
F3 Woodland Fuelbed Installation 40
F4 Australian Oak, and Driftwood Fuelbeds 42
F5 Australian Oak Fuelbed 42
F6 Driftwood Fuelbed 46
F7 Gem/Crystalight or Coal Fuelbed Installation 50
F8 Flame Picture 50
F9 Wall Linings 50
F10 Fitting the Linear Trim 52
F11 Fitting the Bevelled Lite Fascia 53
F12 Locating Wall Mount Cradle for Wireless Control 54
F13 Operating the Appliance 54
F14 Normal Operating Sounds and Smells 55

G Installation Checklist 56

S Service Manual 57

S1 Annual Service Procedure 57
S2 Error Codes 58
S3 Cleaning the Fuel bed and Glass 61
S4 Service-Mode Login (Elevated Permissions) 61
S5 Checking Operating Pressure 61
S6 Replacing/Pairing a Remote Control 62
S7 Replacing the Burners 62
S8 Serial Number 62
S9 Removing or Cleaning the Fan(s) 62
S10 Removing the Control Trays 63
S11 Pressure Switch Removal 64
S12 Replacing the Thermal Cut Out 65
S13 Single Sided Front to Back Conversion (only for single sided fires) 66
S14 Servicing the Horizontal / Vertical Powerflue 69
S15 Wiring Diagrams 70

A PRODUCT DESCRIPTION AND DIMENSIONS

A1 Product Description

The Escea KB-Series gas fire is a room sealed gas appliance designed to be built into a false cavity. It is a powerful gas heater that, on the lowest setting (effect only) will still generate approximately 50% heat. The appliance is flued using co-linear flexible aluminium flue. The user will control their fire with the bluetooth remote that will normally be located in its wall mount cradle. In addition to the remote the appliance has a single auxiliary On/Off button on the unit. When not in operation it is in a standby mode unless it is physically isolated from the mains supply.

A2 Recommended Install Process

The following diagram illustrates the steps required to install your gas fire. The sequence in which you choose to do these tasks will vary depending on your individual scenario. Please read these instructions fully before proceeding with the installation.

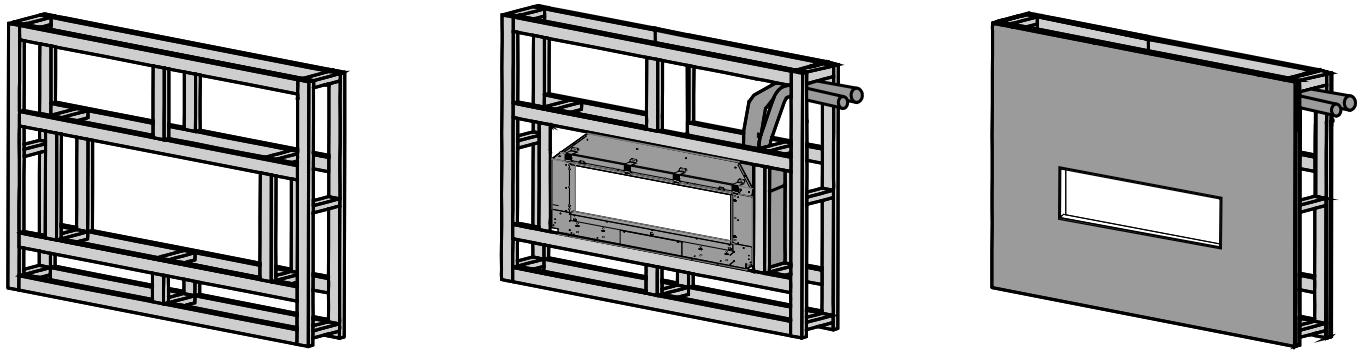

FALSE CAVITY INSTALLATION		
CREATE THE CAVITY	**INSTALL ELECTRICAL / GAS CONNECTIONS, FLUE SYSTEM, AND FIREPLACE**	**FINISH INSTALLATION AND FIT FASCIA**
Section B	Section C, D	Section F

A3 Mode KB1150, KB1400, and KB1650 Product Dimensions

NOT TO BE MISTAKEN FOR CAVITY DIMENSIONS

All dimensions are in mm.

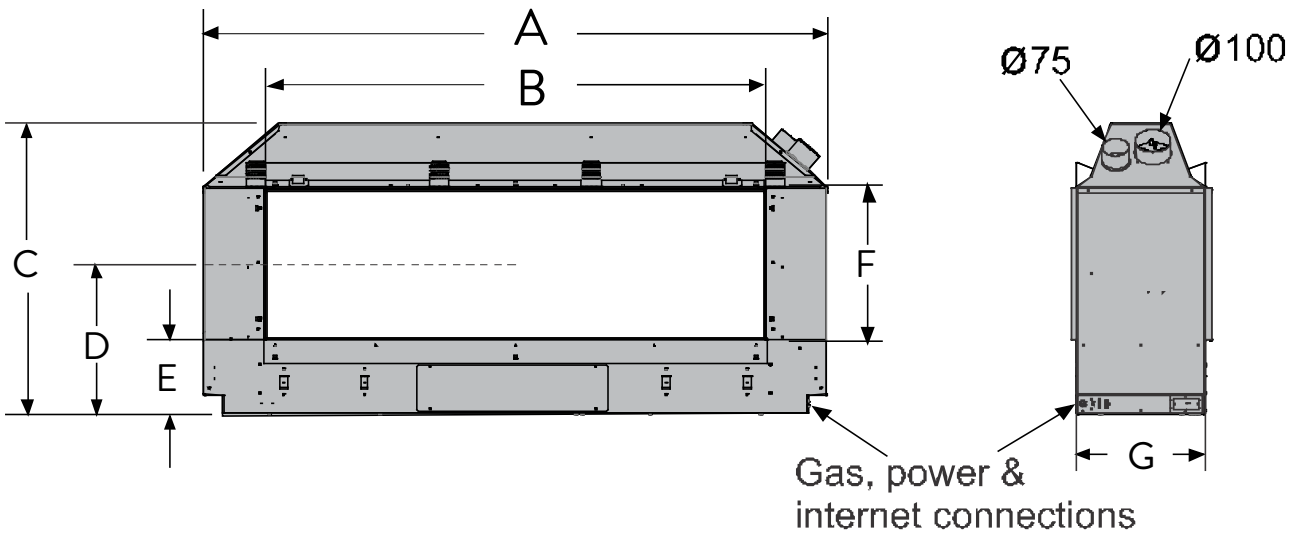

MODEL	A	B	C	D	E	F	G
KB1150	1401	1067	794	408	203	411	379
KB1400	1693	1359					
KB1650	1987	1653					

Important: Installations that are not specifically outlined in this manual should be referred to the Escea Architectural Advisory Team.

Please email aa@escea.com

Non-standard installations or scenarios not covered in this manual, can expose materials to higher than anticipated levels of heat.

While non-standard scenarios may meet the surface temperature combustibility requirements of AS/NZS5601 Gas Installations, some materials may be exposed to levels of heat greater than their tolerances allow. Specifiers and Installers must choose materials when in these scenarios that meet the combustibility requirements AND the maximum service temperatures allowed by the chosen product.

Escea takes no responsibility for material selection and reference should always be made to the relevant material manufacturer’s maximum service temperatures for the suitability of use.

For more information refer to the Escea Materials Guide or contact the Escea Architectural Advisory Team - aa@escea.com

B CREATING THE CAVITY

B1 Cavity Shape

The Mode KB gas fire is suitable for self supporting timber or steel framed cavities. Most existing masonry cavities will not be suitable.

B2 Designing the Cavity

The following aspects must be considered when designing this installation:

- Appliance physical size
- Wall finishing and interaction with appliance
- Positioning of appliance in regards to wall lining (depth into wall)
- Exhaust termination aspect – horizontal/vertical and flue configuration
- Flue exhaust fan noise
- Exhaust cowl access for maintenance
- Gas pipe layout
- Gas isolation valve / pressure test point position
- Electrical isolation switch
- Home automation network connections

THIS KB SERIES FIRE IS TO BE INSTALLED PRIOR TO ANY WALL LINING.

THE WALL LINING IS THE VERY LAST TASK TO BE COMPLETED IN THIS INSTALLATION.

The cavity and wall linings may be constructed from standard timber framing materials and do not need to be non-combustible.

It is not necessary to line the sides or back of the cavity.

Minimum Framing Dimensions

Note: Dimensions shown do not include all allowances for clearances to combustibles to the flue.

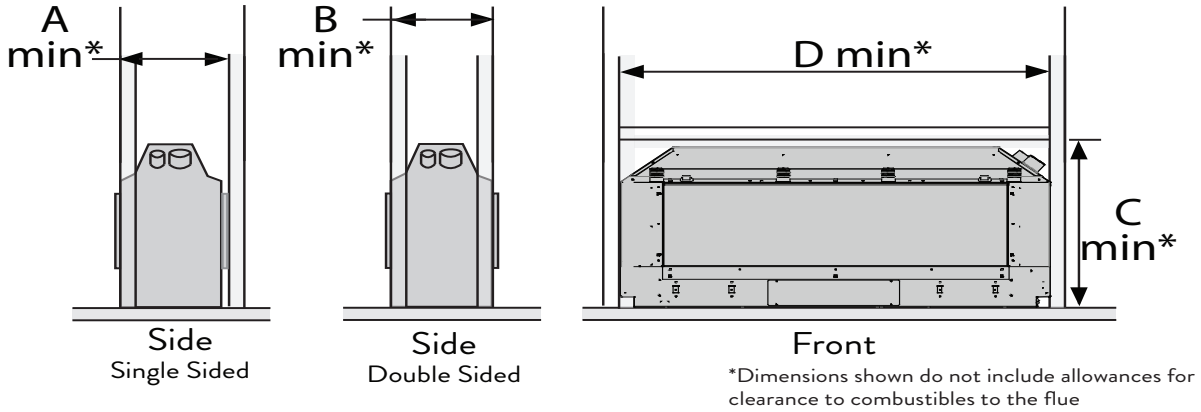

MODEL	A	B	C	D
KB1150	365	350	850	1500
KB1400				1793
KB1650				2087

B3 Hearth

A hearth is not required. If a hearth is installed below the fire, it must be at least 100 mm below the bottom of the glass or be composed entirely of non-combustible materials.

B4 Cavity Base

This appliance MUST be fully supported on its base, over the entire area of the underside of the appliance. The base must also be level and strong enough to support the total product weight, which is approximately 158 kg.

The fireplace can be recessed into the ground but must maintain clearances detailed in the diagram (shown right) for any combustible flooring materials.

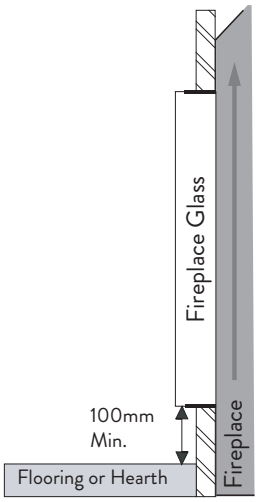

B5 Wall Lining

Only after all previous sections have been completed is it permissible to commence with the final wall linings detailed in section F9 on page 50.

Wall lining cutout dimensions around the glass must be adhered to.

Please refer to section F9 on page 50 for wall finishing dimensions surrounding glass.

B6 Television & Mantel Clearances

Television

The diagram (shown right) shows the recommended minimum clearances for the location of any electrical equipment (such as Plasma TV, LCD TV, or home theatre) above a KS Series gas fire. A mantel/recess is not required to comply with our recommendation of TV installation.

NOTE: Dimensions are from the top edge of the glass frame.

NOTE: Placing Artwork above an Escea Fireplace is done at your own risk. Escea does not take responsibility for any damage that results to artwork placed above a fireplace as it will be exposed to some levels of heat depending on the position on the wall and height above the fireplace. Escea recommends contacting our advisory team to help clarify the suitability and placement at aa@escea.com.

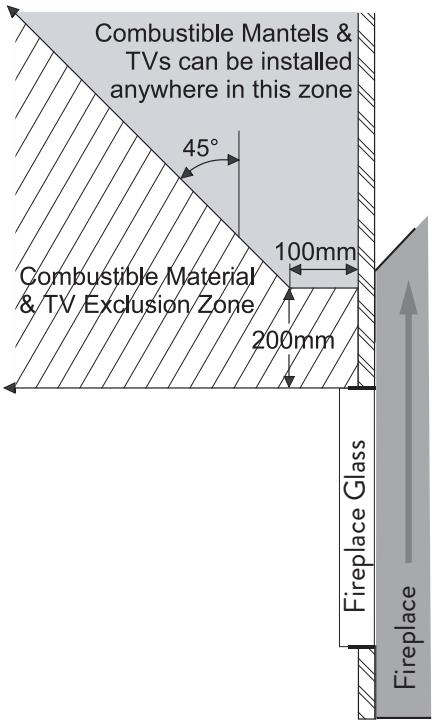

NOTE: The television clearance recommendations are to be treated as a suggestion of a suitable installation only. It is the responsibility of the end user to check the installation instructions of their electrical appliances to ensure that the location in relation to the gas fire is suitable. Escea in no way guarantees or takes responsibility that the recommended installation suggestion will be suitable for all electrical or home entertainment appliances. Escea recommends contacting our advisory team to help clarify the suitability and placement at aa@escea.com.

Mantel

Please refer to the diagram (shown upper right). Combustible mantels or protruding ledges above the heater must not be installed lower than the dimension shown.

NOTE: Dimension from the top edge of the glass frame.

C INSTALLING THE FLUE

C1 Flue Configuration (If less than 8m flue length is required)

If your flue system is less than 8m long (as shown in diagrams below), then a simple aluminium flexible flue is required. If you wish to install a longer flue run, please contact the Escea Architectural Advisory Team.

Horizontally Terminated: Utilises the Escea Horizontal Power Flue enclosure kit.

The horizontal offset of the terminal can be any amount up to the total flue length listed below. Please consult with Escea's technical staff if your intended flue configuration falls outside of the bounds of the flue configurations shown below.

NOTE: The fan in this powerflue produces 52 DB of noise, think carefully around the location of the terminal, if the terminal is in close proximity to the fire then the fan noise will be more prevalent.

NOTE: If the only option is to install the terminal close to the fire then introducing sound deadening material around the back of the terminal or stretching out the flexiflue and adding more S-bends is recommended to reduce sound transfer through to the fire.

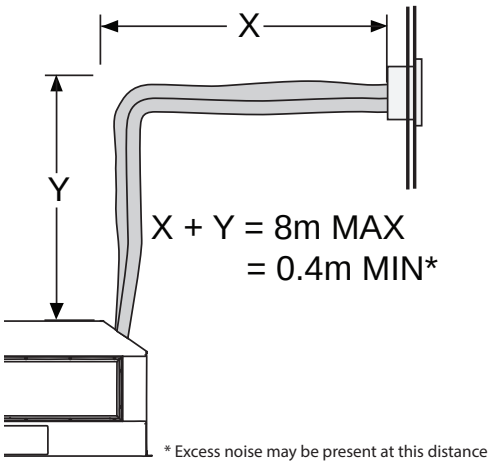

NOTE: When flueing above the fire, the pipe must slope towards fire - NOT towards the terminal. Also when flueing below the fire, the pipe must slope towards the terminal - NOT towards the fire.

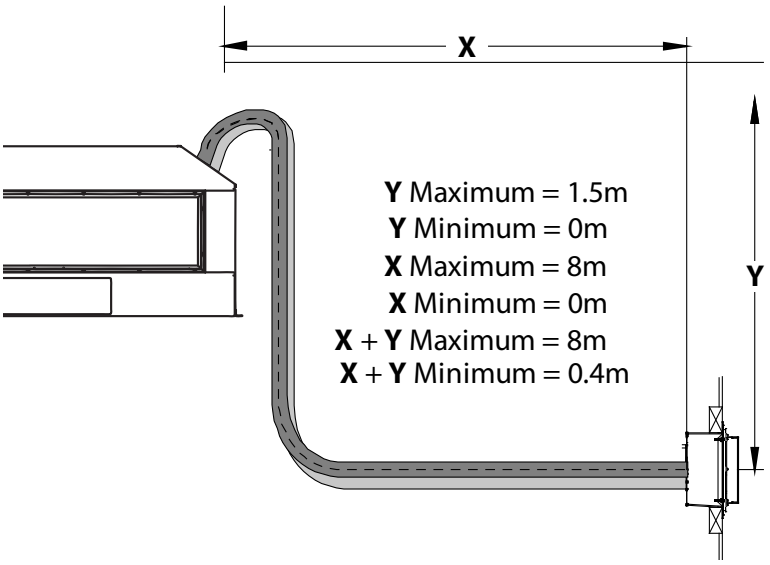

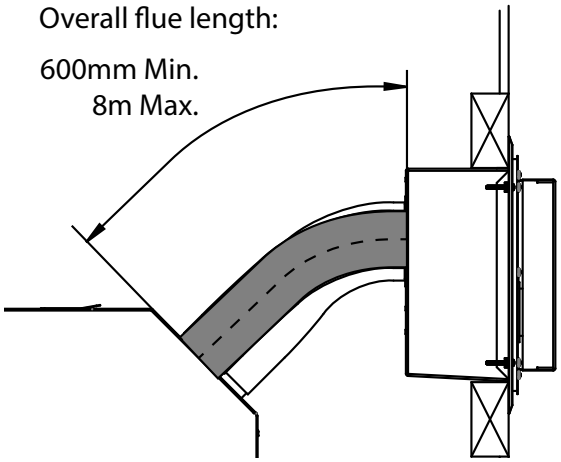

Vertically Terminated: Utilises the Escea Universal Vertical Power Flue enclosure kit.

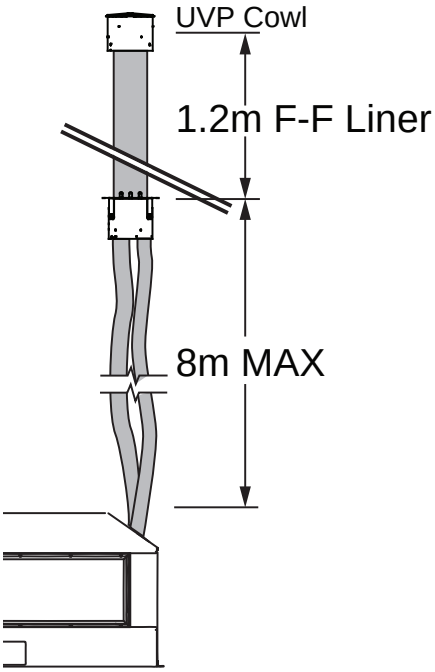

Internal

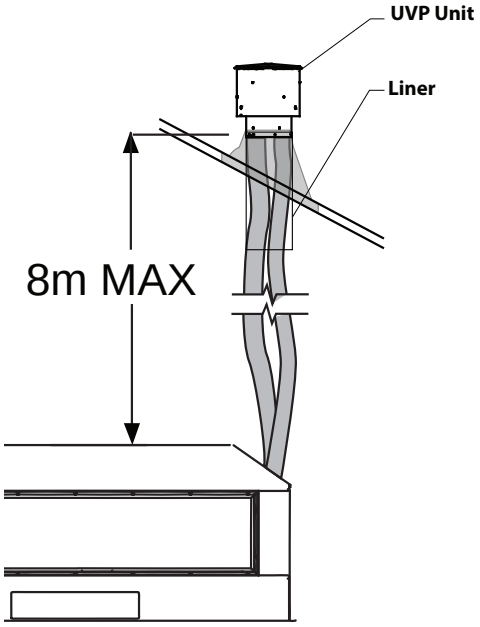

External

C2 Flue Configuration (If more than 8m flue length is required)

If your flue system is greater than 8m long (up to 40m long), then please contact the Escea Advisory Team at aa@escea.com for further guidelines.

C3 Installing the Horizontal Powerflue Wall Terminal Option

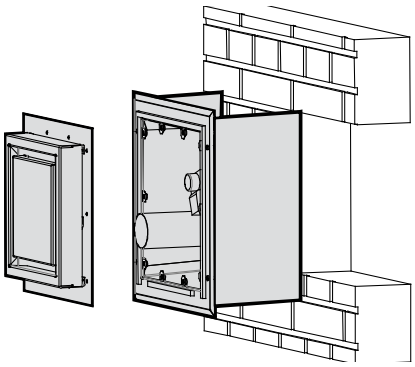

NOTE: The appliance is designed only to operate using the approved flexible or PolyPro flue supplied by Escea. Other brands of flue may not fit, and this will affect the appliance warranty.

The Horizontal Power Flue Wall Terminal must be installed in the correct orientation (the small horizontal slot should be at the bottom). This allows for the correct operation of the flue system and prevents the ingress of water.

The horizontal powerflue wall terminal must be weather tight when installation is complete to prevent damage to the dwelling. It must be installed by a suitably qualified person.

Take notice of the label on the termination which shows the correct orientation of the terminal.

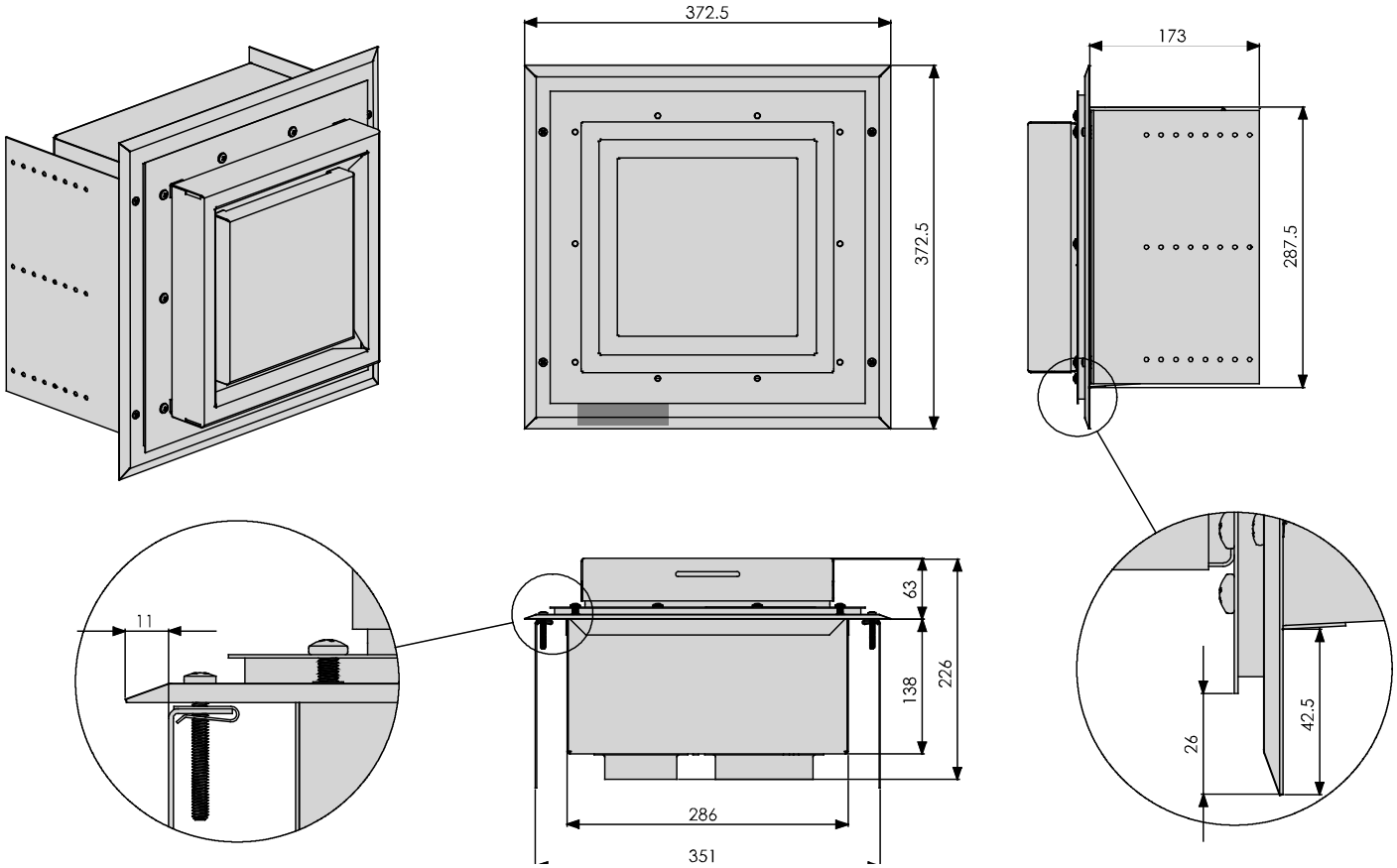

Creating the Hole in the Outside Wall

When cutting the hole in the outside wall, be mindful of how the installation of the horizontal powerflue wall terminal will be finished; the installation must be weatherproof.

Ideal Hole/Cavity Size for Horizontal Powerflue		
	Without Side Brackets	With Side Brackets
X	298 mm	360 mm
Y	298 mm	298 mm
Z	175 mm (Excluding allowance for flue which exits here)	

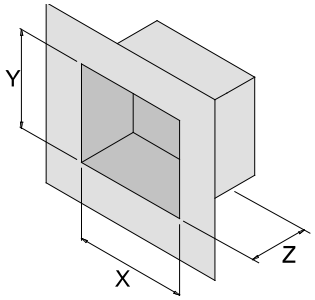

The horizontal powerflue wall terminal can be attached to the wall in two ways:

A) By attaching the optional wall terminal installation brackets to the sides of the cavity and attaching the horizontal powerflue wall terminal to these, from the front:

B) From the front of the terminal:

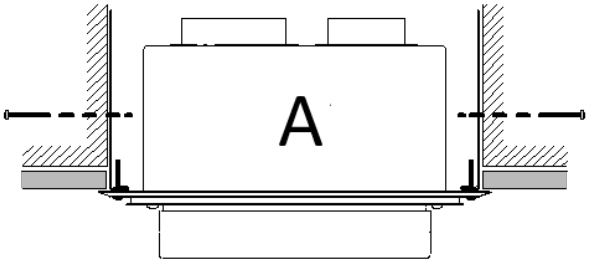

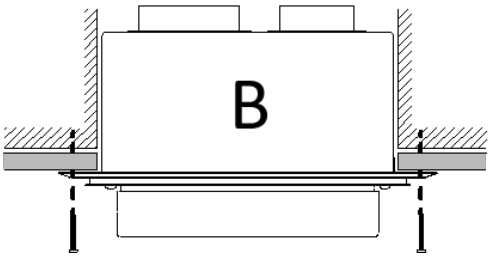

It is highly recommended that the powerflue is installed following option A, as this reduces the possibility of noise from powerflue vibration.

Attach the 100 mm and 75 mm flexible aluminium flues to the spigots on the rear of the horizontal powerflue wall terminal using the hose band clamps supplied. Plug the powerflue electrical cable into the back of the horizontal powerflue wall terminal.

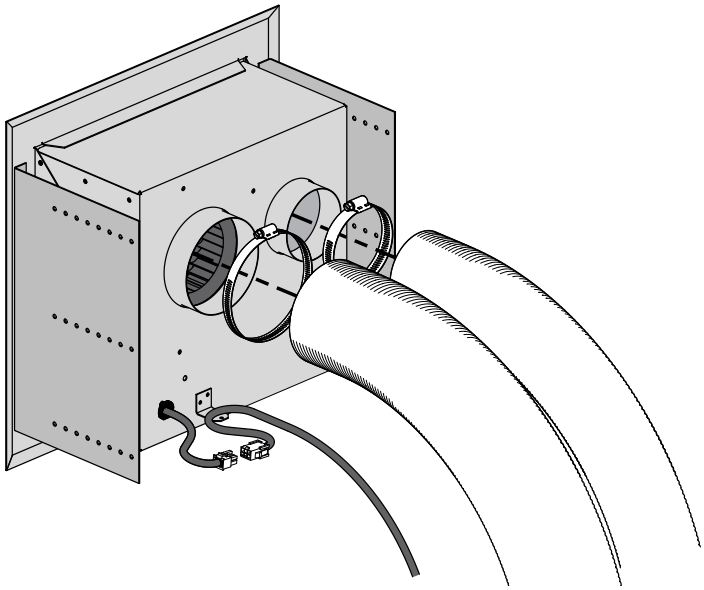

Ensure that the electrical cable is firmly secured to the wall terminal or building to prevent damage or disconnection if pulled.

Fit the horizontal powerflue wall terminal into the hole and fix it in place, making sure the installation is sealed appropriately to prevent the ingress of water from outside the wall cladding.

NOTE: It is the responsibility of the installer to ensure the horizontal powerflue wall terminal is installed to all relevant building codes to ensure weather tightness. This may necessitate the use of appropriate flashing material where appropriate.

IMPORTANT: Ensure that flashings do not restrict the air intake slot around the periphery of the cowl.

How to Flash the Horizontal Powerflue

The following diagrams are excerpts from the Escea architect drawings and are available in full on our website. These diagrams are recommendations, and your installation must comply with any local or national building codes.

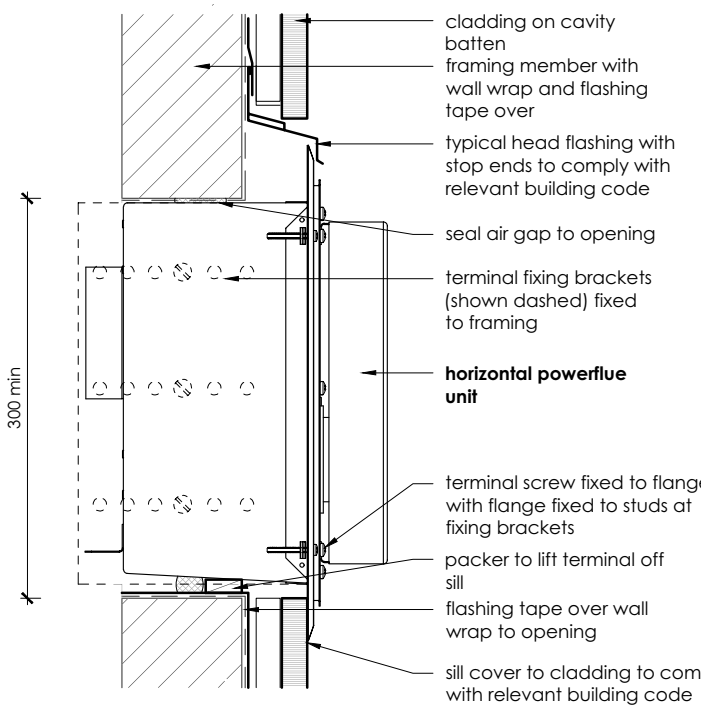

Head and Sill scale 1:5

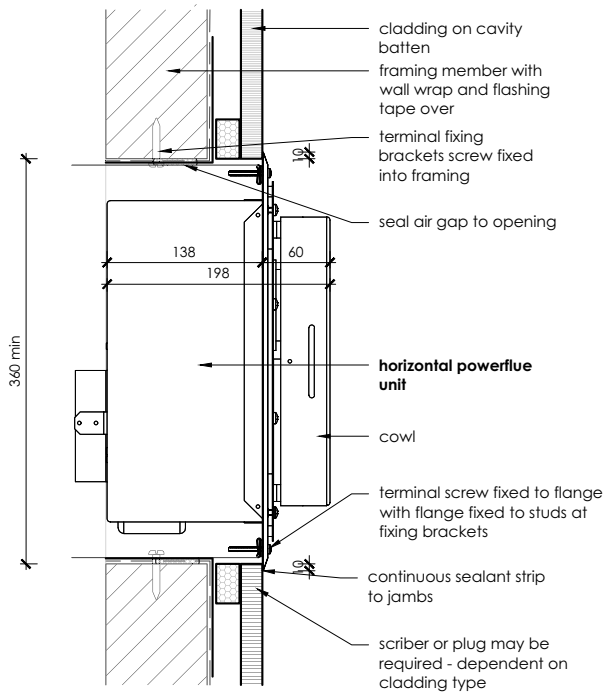

Jamb scale 1:5

C4 Installing the External Universal Vertical Powerflue (UVP)

The UVP is designed to have the enclosure containing the fan unit mounted externally. Escea recommends this install for a UVP powerflue; an example is shown below.

IMPORTANT: When installing the unit onto a flue liner, take care regarding the minimum required length of flue liner above the roof.

Ensure the 43mm restriction plate is installed on the inlet.

The cowl surround should be fixed in place as shown right.

Mount the UVP kit to the top of a chimney flashing plate or penetrate the roof with an optional flue liner accessory and fit the UVP kit over the flue liner, sealing the penetration with a decktite or similar flashing.

Ensure the terminal is vertical and rigidly mounted and the flexi flue attached below is fixed to the terminal spigots using the supplied hose clamps and aid clips.

Place the clamp over the flexi flue and the clip over this. Make sure the flexi tube has been stretched out as far as possible where the hose band clamps are going to be attached (not still compressed). Slide the flexi tube over the spigot and hold it in place by drilling one hole through the spigot using the clip guide hole and riveting the three components together.

NOTE: If this install is impractical for your situation see information regarding an internal install of the UVP, go to section C5 on page 18.

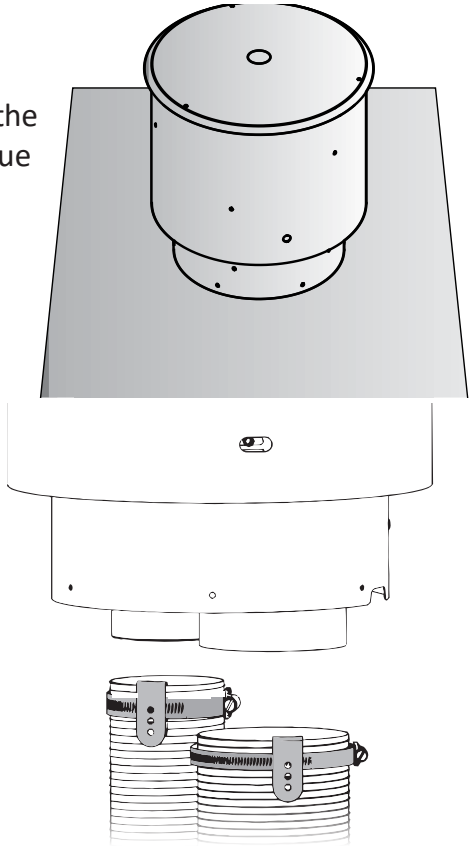

C5 Installing the Internal Vertical Powerflue (UVP)

NOTE: Internal install is only recommended for situations where an external install is impractical. For information regarding an external install, go to section C4 on page 17.

The Universal Vertical Powerflue (UVP) internal configuration is designed to have the fan, mounted within the roof space of the house, and the vertical 225 mm diameter liner, containing a 100 mm flexi, penetrate through the roof. The UVP internal conversion kit comes with a 1200 mm liner that is specific to the internal installation and must always be used.

NOTE: The flue setup must comply with either section C1 on page 12 or C2 on page 13.

Use standard methods to flash the roof penetration. The installation must be weatherproof and conform to all local council standards including powered flue termination rules.

Mount the fan mount bracket (1) to the roof framing and strapping using timber ensuring that the flue is rigid and vertical. Ensure that the mounting timber does not obstruct access to the 3xM5 screw threads on the side of the fan unit.

Aim to have the fan enclosure (2) mounted as high as possible, mainly to allow sufficient fall for condensation drainage if the flexi-flue is to run horizontally.

Ensure there is sufficient space below fan enclosure (2) to have access to fit the flexi-flue tubes (3) and allow flowing bends if required.

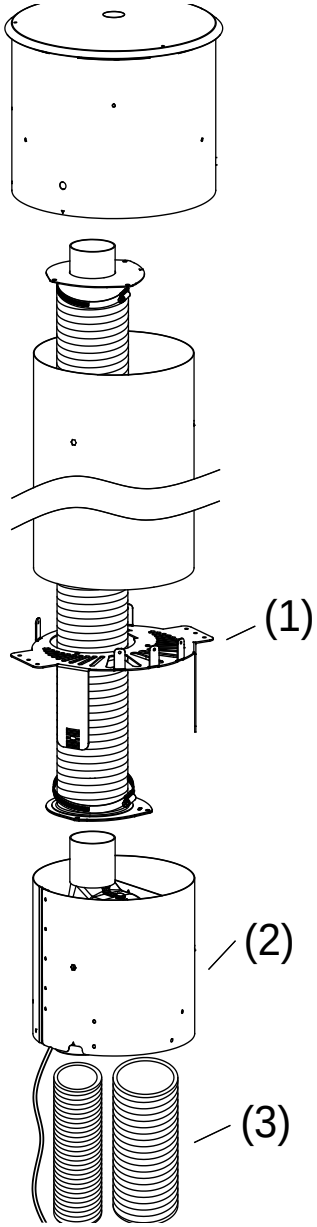

IMPORTANT: The UVP-Internal and the flexi flue connections must be installed in a location accessible for service or replacement; a service hatch or removable flashing to allow access is required.

IMPORTANT: When installing the unit onto a flue liner, ensure the length of flue liner above the roof is the minimum required length.

Ensure the 43 mm restriction plate is installed on the inlet.

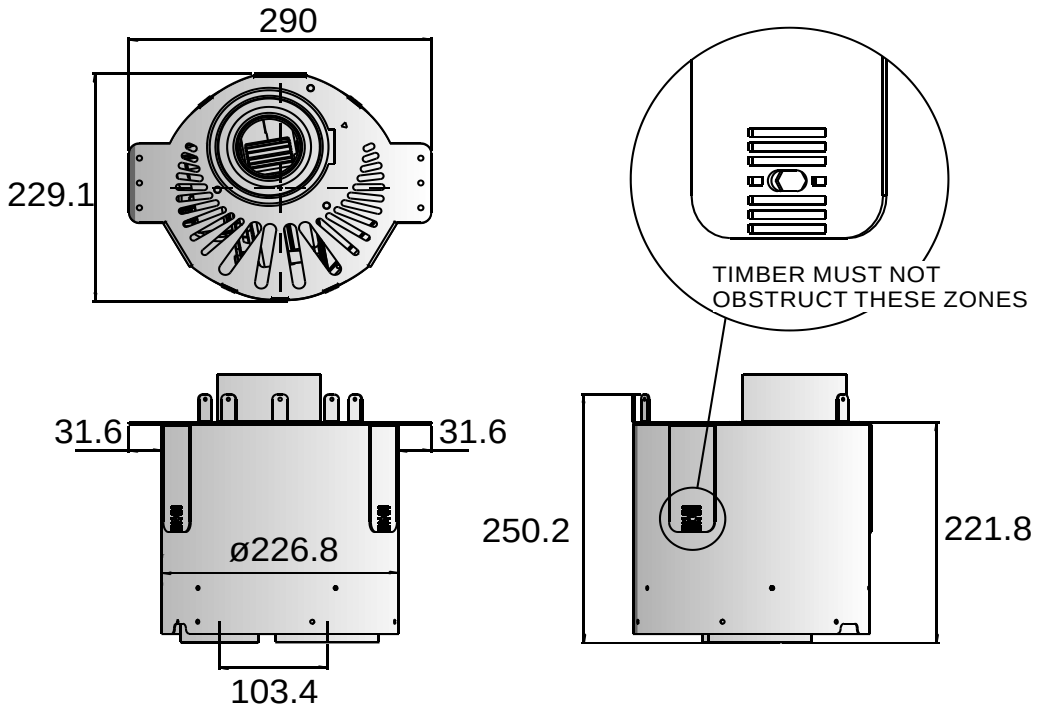

The UVP-Internal kit is intended for use within an accessible roof space or 'chimney' construction.

Service access must be provided.

Ensure installation complies with relevant building codes and regulations

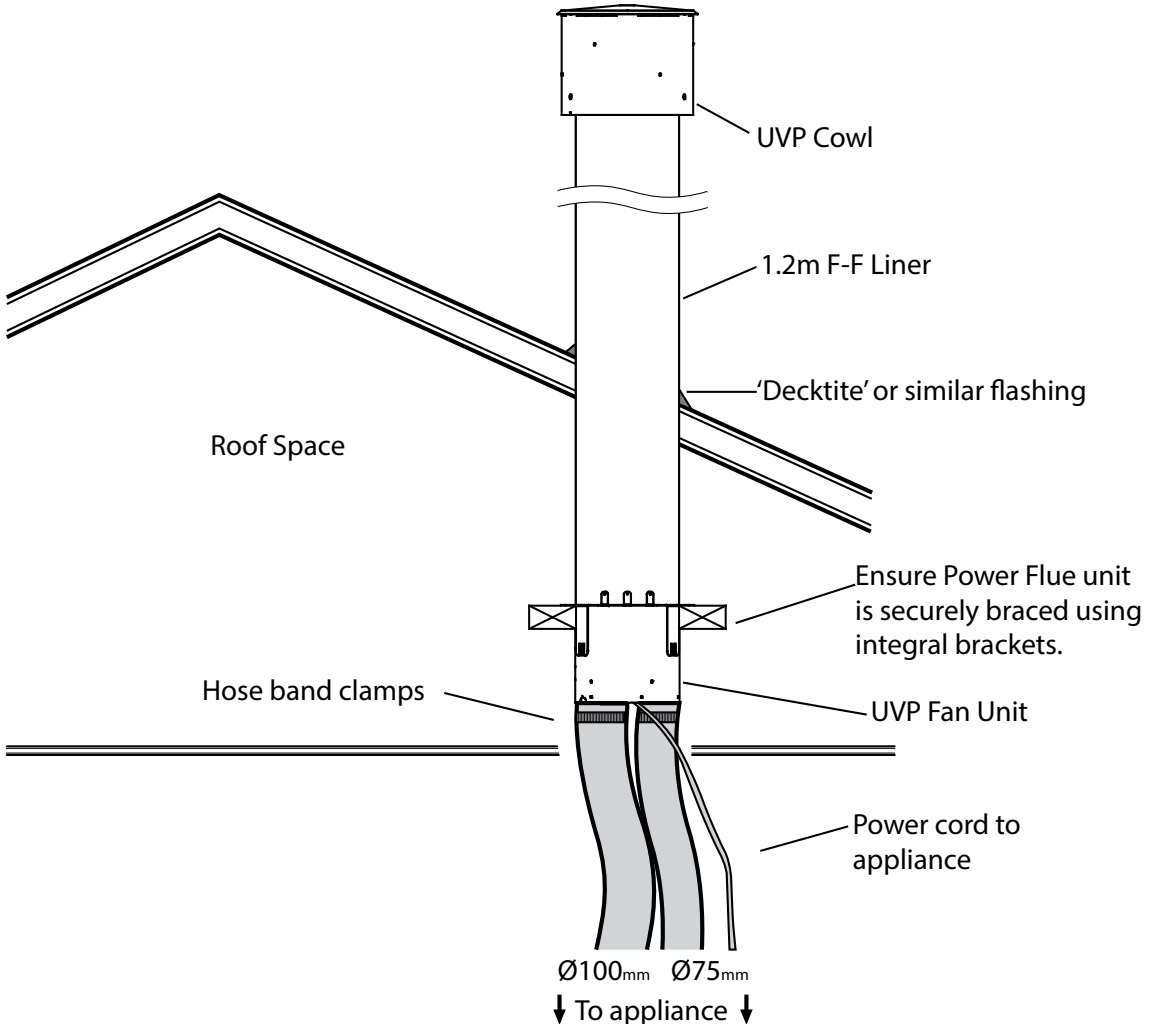

C6 Installing in Accordance with Relevant Codes

The location of the horizontal powerflue wall terminal must be installed in accordance with AS/NZS 5601 and any other relevant building codes. If possible, avoid installing the horizontal powerflue wall terminal in areas exposed to high winds and extreme weather.

Some of the minimum clearances for a fan assisted wall terminal are listed below; please refer to AS/NZS 5601 Gas installation standard for full guidance on the design of the flue system. Where possible allow a greater clearance.

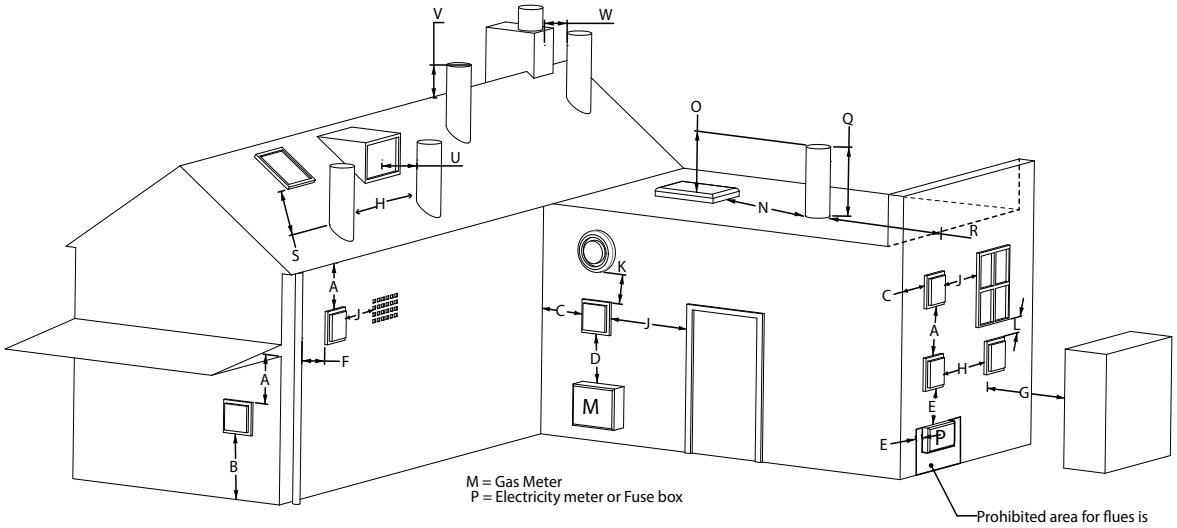

A	Below eaves, balconies and other projections	200 mm
B	From the floor, above a balcony or other surface	300 mm
C	From a return wall or external corner	300 mm
D	From a gas meter or regulator vent	1000 mm
E	From electricity meter or fuse box	500 mm
F	From a drain pipe or soil stack	75 mm
G	Horizontally from any building structure or obstruction	500 mm
H	From any other flue terminal or combustion air intake	300 mm
J	Horizontally from any moving window, door, non-mechanical air inlet, or any other opening into a building with the exception of sub floor ventilation	300 mm
K	From a mechanical air inlet or spa blower	1000 mm
L	Vertically below any moving window, door, non-mechanical air inlet, or any other opening into a building with the exception of sub floor ventilation	300 mm
N	Horizontally from a roof light	600 mm
O	Vertically from a roof light	500 mm
Q	Vertically from a flat roof	500 mm
R	Horizontally from a vertical structure	500 mm
S	Below a roof window	2000 mm
T	Above or either side of a roof window	600 mm
U	From a dormer window	1500 mm
V	Above the apex of the roof (see note 1 on following page)	300 mm
W	From an open flue	1500 mm

NOTE:

1) Should the flue not extend past the apex, the bottom opening of the flue should extend at least 200 mm from the roof (or 300 mm in regions with heavy snow).

2) The installation of a flue into a carport is not recommended.

3) The flue terminal will get very hot when in use. Precautions should be taken to protect people and animals from injury.

C7 Running the Flue

IMPORTANT: A 50 mm clearance to combustibles must be maintained from the exhaust flue for the first 1.2m of flexi flue from the appliance (see diagram below).

Run the 100 mm and 75 mm flexible aluminium hoses from the cavity to the rear of where the horizontal or vertical powerflue terminal will be installed. Allow enough stretch in the flexible aluminium flue to allow it to protrude through the wall/ceiling/roof/flue liner to enable it to be connected to the powerflue terminal. The flue should be expanded at each end in order for the flue to be attached to the fire/ powerflue. It is advisable to secure the flexi flue at regular intervals to prevent vibration, movement and sagging. Steel wire or 'builders strapping' may be used for this purpose.

NOTE: The flexible flue is shipped in a 'compressed' form. Extend it to your desired length by stretching.

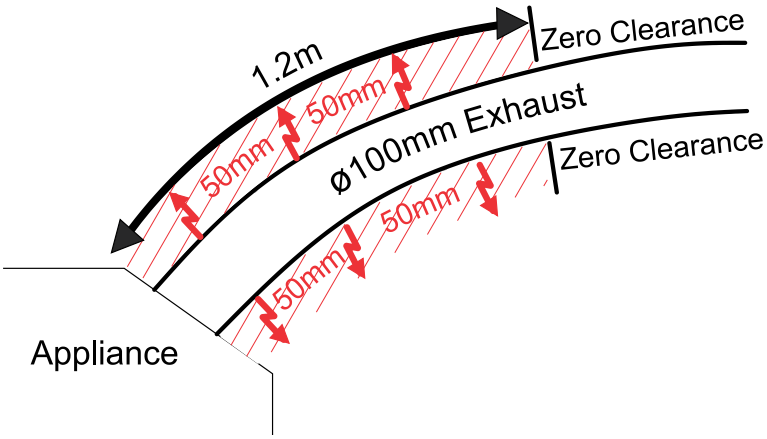

C8 Running the Powerflue Electrical Cable

NOTE: The powerflue terminal is powered from the appliance and must be connected to the appliance with the supplied electrical cable only.

IMPORTANT: Ensure that the appliance power supply is disconnected before making the connection to the terminal

The supplied electrical cable is 7 metres long; flue extension kits also include a powerflue electrical cable extension.

Run the electrical cable from the installed fireplace to the hole in the outside wall. Ensure it is not draped over, or in contact with, the outer shell of the appliance or the flues. The cable must be kept clear from any other possible heat sources, sharp edges, or moisture. Fix it appropriately and allow enough cable to be able to pull both the appliance and the powerflue terminal out from their installed positions.

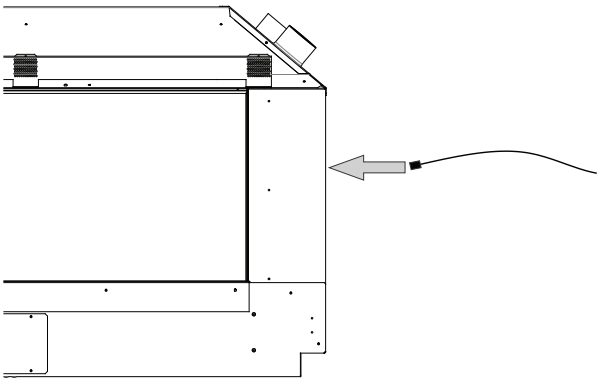

IMPORTANT: If you do not connect the powerflue electrical cable to both the fireplace and the powerflue, this will result in an error when the fireplace is turned on.

IMPORTANT: Test the fan before continuing with the rest of the installation.

END OF SECTION C

BY THE END OF THIS SECTION, YOU SHOULD HAVE:

- ◯ **A weather-tight installed powerflue terminal with clearance as specified by AS/NZ5601**
- ◯ **Reasonable access to the terminal for maintenance purposes**
- ◯ **Flue attached to the powerflue terminal leading back to the appliance with the correct flue clearances**
- ◯ **The electrical cable from the powerflue terminal run back to the appliance location in an electrically safe manner**

D INSTALLING THE ELECTRICITY AND GAS TO THE APPLIANCE

D1 Power Supply

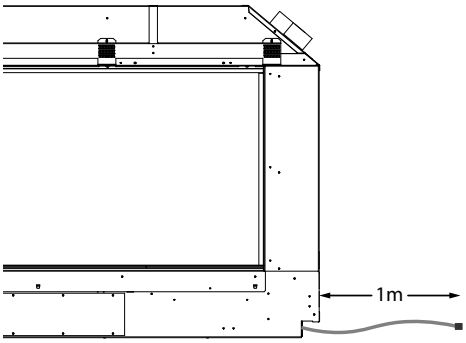

Before the Fireplace is installed, consideration must be given to the location of an appropriate power supply. An earthed 230/240 volt mains power connection (typically a standard 3 pin outlet) must be available within 1m of the bottom right of the appliance.

This connection must be accessible after the heater has been fully installed so that the appliance can be safely disconnected from the mains power supply prior to servicing.

A mains isolation switch (compliant to AS:NZS 5601 Clause 6.2.8) which is accessible from outside the cavity can also be used to disconnect the power.

Regardless of the method used, it **MUST ALWAYS** be possible to safely isolate the electrical supply to the appliance after it has been fully installed.

This appliance must not be located immediately below a socket outlet. This appliance will draw a maximum of 2 Amps from a 230/240 V supply. No additional power supply is required for the power flue.

An electrical wiring diagram is located underneath the electronic tray, on the rear of, and also in the rear of this manual (Section S15 on page 70).

D2 Pairing Fireplace to Escea Smart Heat App

Download and install the Escea Smart Heat App

Ensure the fireplace and remote have been powered on, then follow the on screen instructions (see below) to connect the unit to the app.

NOTE: TO WAKE THE REMOTE YOU MUST CHARGE USING AN USB-C CONNECTION CABLE.

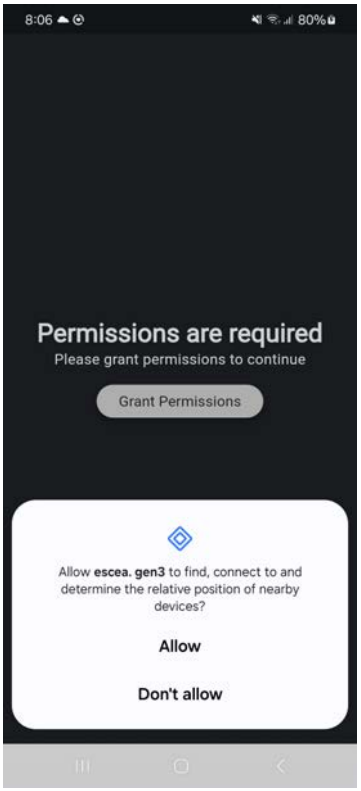

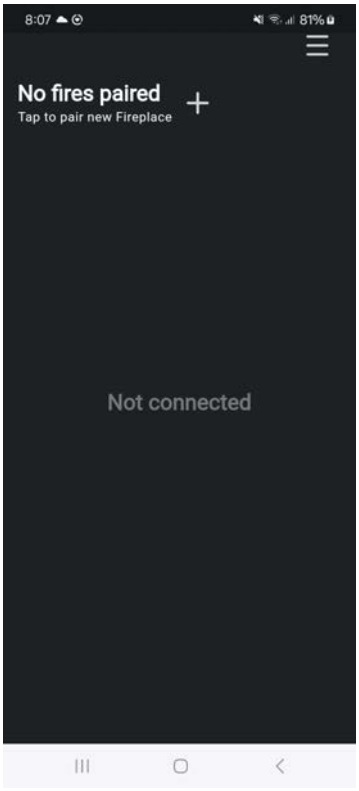

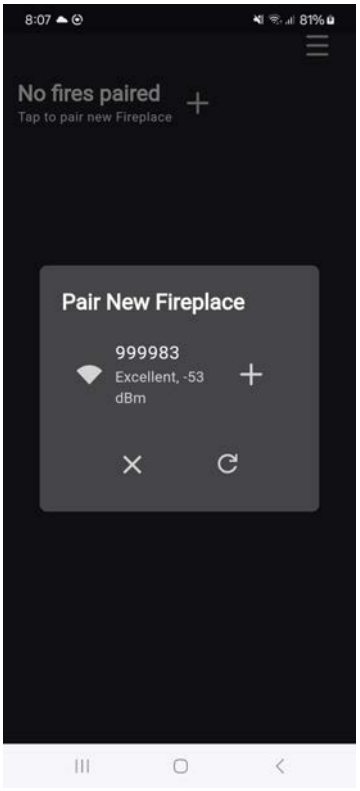

Once the fireplace has been found, you can pair this to your device by entering the PIN found within the settings menu on the remote control or the information card supplied within the remote packaging.

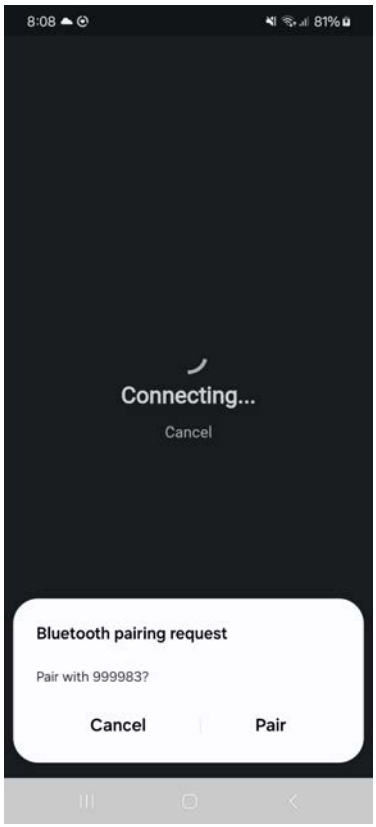

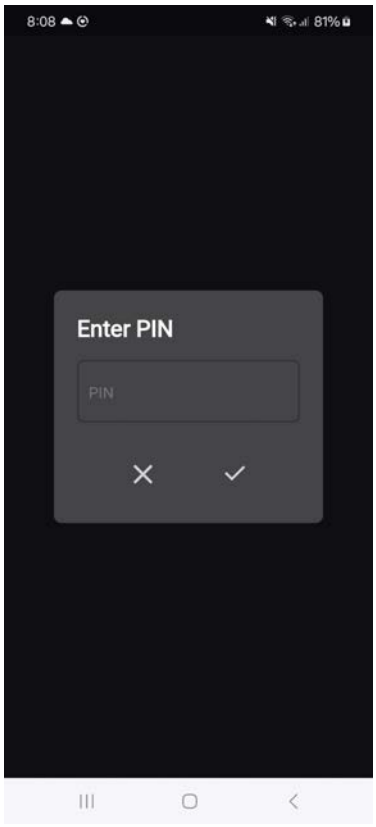

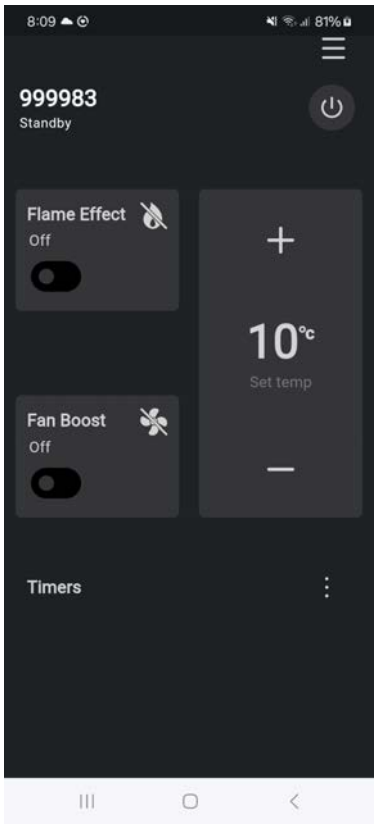

Fireplace information (PIN and Serial) can be found within the remote control menus (see below)

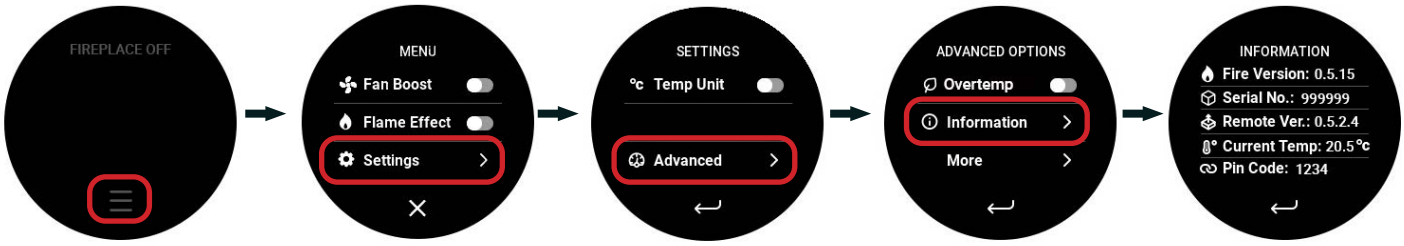

D3 Home automation setup (optional)

If this feature is desired connect it to the appliance next to the power flue cable. For more information see section E8.

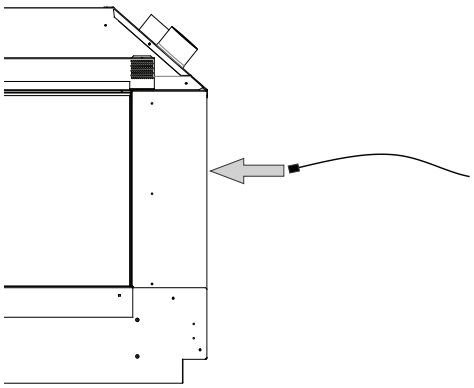

D4 Gas Supply

Escea does not condone using a 9kg bottle as the main gas supply for an Escea fire. Doing so could result in a dirty or poor flame and produce excess soot build up.

D5 Gas Pipe Sizing

Gas pipe should be sized as per the requirements of AS/NZS 5601. The pipe sizing must be sufficient to deliver the following volume of gas to the heater with all other gas appliances in the home running at the same time:

MAXIMUM MODE KB1150 GAS CONSUMPTION = 34MJ/HR

MAXIMUM MODE KB1400 GAS CONSUMPTION = 40MJ/HR

MAXIMUM MODE KB1650 GAS CONSUMPTION = 44MJ/HR

D6 Gas Pipe Position

The gas connection is inside the appliance and is ½” male BSPT on the lower right of the appliance as shown below. Access is through the silicone grommet circled below on the RH side of the chassis.

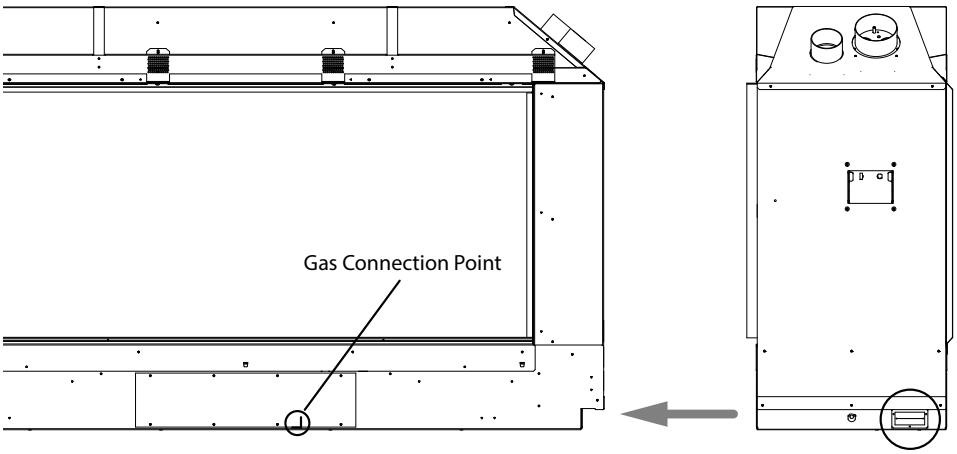

Access for connecting the gas supply to the gas connection point (shown in the diagram above) should be through the access hatches located on the front and back of the appliance (the front as shown in the diagram below).

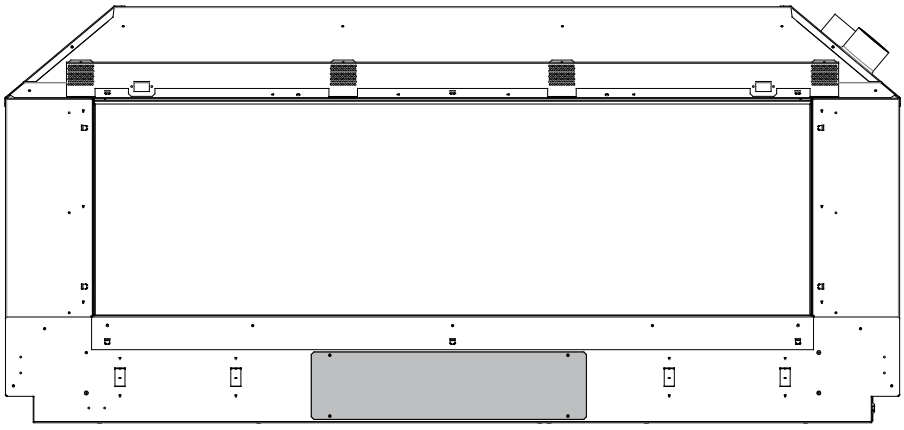

D7 Gas Isolating Valve

As per AS/NZS 5601 it is recommended that a gas isolating valve be installed prior to the inlet of the fire for servicing in the future.

It is recommended to install a gas isolating valve as close to the appliance as possible when installing your Escea gas product. Fix it in a convenient position to allow it to be closed easily during operation. Consider access once wall linings have been fixed. In some instances, a gas isolation valve will not be able to be fitted due to physical limitations and access points. In such a situation it is acceptable to place a valve closer to the gas meter or use the gas meter as the isolating valve during service work and install.

END OF SECTION D

BY THE END OF THIS SECTION, YOU SHOULD HAVE:

- ◯ **An unlined cavity with 230/240 V AC supply that the appliance can be plugged into an electrical isolating switch that is accessible once the appliance is installed**
- ◯ **A suitably sized gas supply to the right hand side of the appliance with a pressure test point, ready to be connected once installed**

E INSTALLING THE APPLIANCE

WARNING!

THE FOLLOWING INSTRUCTIONS MUST ONLY BE UNDERTAKEN BY A SUITABLY APPROVED PERSON. ANY TAMPERING BY AN UNAUTHORISED PERSON WILL VOID THE PRODUCT'S WARRANTY AND MAY RESULT IN A DANGEROUS CONDITION.

E1 Connecting the Flue

Access the top of the appliance and connect both the inlet flue (75 mm ID / 85 mm OD) and the exhaust flue (100 mm ID / 110 mm OD) to their respective spigots. Tighten the hose clamps onto the spigots. Ensure the flue connection is air tight. Sealant is not required.

IMPORTANT: The flue connection MUST be secured with the clips provided and tape MUST NOT BE USED. If any of the flue pipe is damaged and integrity compromised then it should not be repaired with tape, it should be replaced.

E2 Installation

Insert the gas fire into the cavity and fix the appliance down in correct position using the brackets on each end of the appliance. It is a requirement that this appliance be securely fastened at the base.

WARNING!

ENSURE THAT THE FIRE IS SEISMICALLY RESTRAINED IN A MANNER APPROPRIATE TO THE INSTALLATION LOCATION

E3 Removing (and Replacing) the Glass

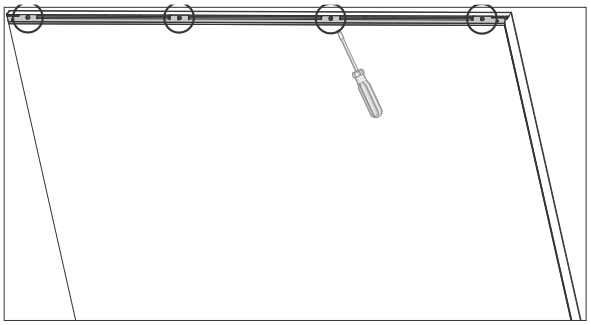

Remove the glass by unscrewing the four 1/4 turn fasteners located at the top of the glass (circled right) and remove the bracket (shown right shaded grey). Allow the glass to lean towards you and carefully lift it out.

Place the glass carefully aside. Note that any soot on the glass can mark carpet and furnishings.

IMPORTANT: When replacing the glass, check the channel that the glass sits in for debris. Remove any debris prior to placing the glass. If you feel resistance when leaning the glass towards the fireplace, remove it and double check for debris in the glass channel.

WARNING!

TRYING TO PLACE THE GLASS WITH DEBRIS IN THE GLASS CHANNEL MAY RESULT IN THE GLASS BREAKING.

E4 Removing (and Replacing) the Infill & Burners

Ensure that the gas jets and burner collars are appropriate to the gas type using the tables on page 32. For gas type conversion, proceed to “E6 Gas Type Conversion” on page 31.

IMPORTANT: Take care not to scratch the firebox paint or glass while handling parts.

Remove the infill first by removing the 4 screws circled below (8 screws in the KB1650), lift one end out first, then gently lift the other. (When replacing, ensure the pilot shroud sits around the pilot.)

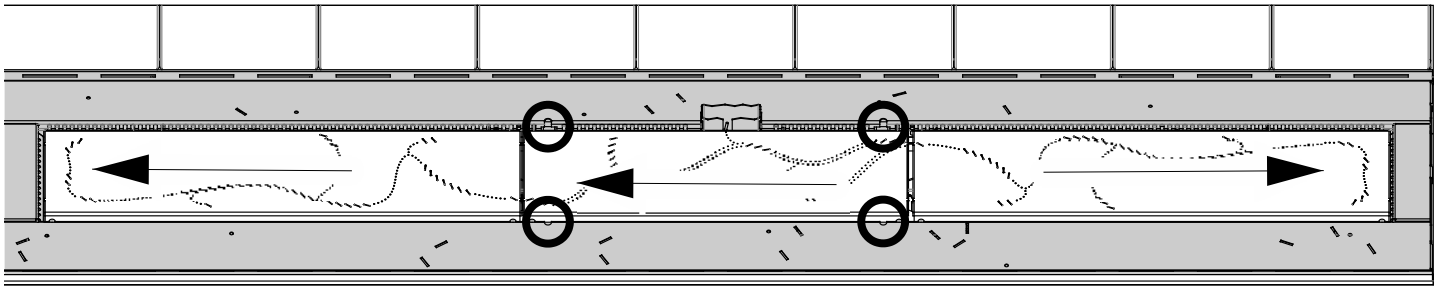

Remove the burners by sliding them in the direction of the arrows (above). Start with the sides before removing the centre burner.

To replace the burners and infill, reverse the steps above, placing the centre burner before the sides.

E5 Checking the Gas Operating Pressure

Note: Ensure the thermostat control within the remote does not cause the flame to modulate down by increasing the set temperature and keeping the remote in a cool environment.

Check the inlet pressure upstream of the appliance using the test point installed earlier.

If the wallboard has not been installed, the regulator, valve, and test points can be accessed without removing the glass, infill, or burners by removing the hatch at the bottom front of the fire.

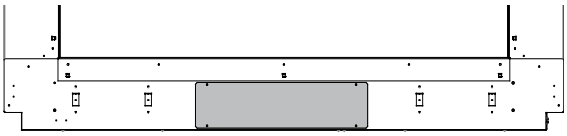

Otherwise, the regulator, valve, and test points can be accessed through a hatch inside the firebox:

- Follow the instructions in “E3 Removing (and Replacing) the Glass” on page 27.
- Follow the instructions in “E4 Removing (and Replacing) the Infill & Burners” on page 28.
- Remove the access panel on the gas tray by removing the 6 screws indicated below.

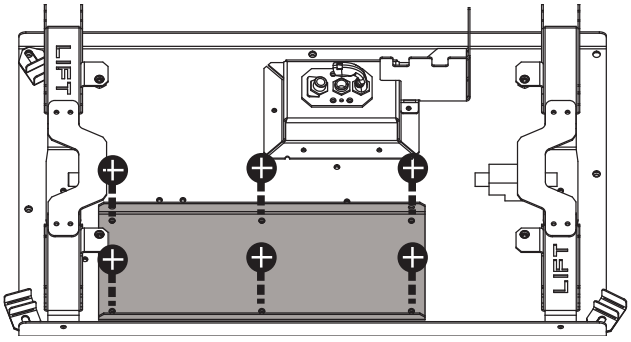

WARNING!

THE REGULATOR THAT IS SUPPLIED WITH THE FIRE MUST NOT BE REMOVED. REMOVAL OF THE REGULATOR, OR REPLACING IT WITH ONE NOT INTENDED FOR USE WITH AN ESCEA FIRE, WILL VOID THE LIMITED APPLIANCE WARRANTY AND MAY BE DANGEROUS.

WARNING!

IF USING THE HATCH INSIDE THE FIREBOX TO ACCESS THE REGULATOR, VALVE, AND TEST POINTS, TAKE CARE WORKING CLOSE TO THE OPEN FLAME OF THE BURNERS.

The gas valve (see image) has manometer test points at A and B. Test point A is used to measure the operating pressure - post-regulator and test point B is used to measure the operating pressure on high and low. (see “Gas Pressure Table - Mode KB1150” & “Gas Pressure Table - Mode KB1400”)

Turn the gas and power supplies ON.

Turn on the fire by pressing the ‘⏻’ button on the remote. Within a few seconds the appliance will begin its startup sequence with a 30 second purge of the flue fan. After the purge it will attempt ignition. It may take several attempts to light the first time due to air in the gas line.

Once the fire has lit the pilot and main burner you will be able to measure the operating pressure. Set the remote thermostat temperature to 38°C by pressing ‘+’ on the remote touch screen and ensure the remote is kept in a cool environment. This will allow maximum gas flow into the appliance.

Ensure all other gas appliances within the house are still able to operate at maximum.

Open test point A and attach a manometer tube to measure the operating pressure—post regulator.

If the operating pressure does not read within 5% of the table, remove the cap from the regulator (shaded grey in image below) and adjust the threaded spring stop. Press the ‘⏻’ button again to shut down the fire.

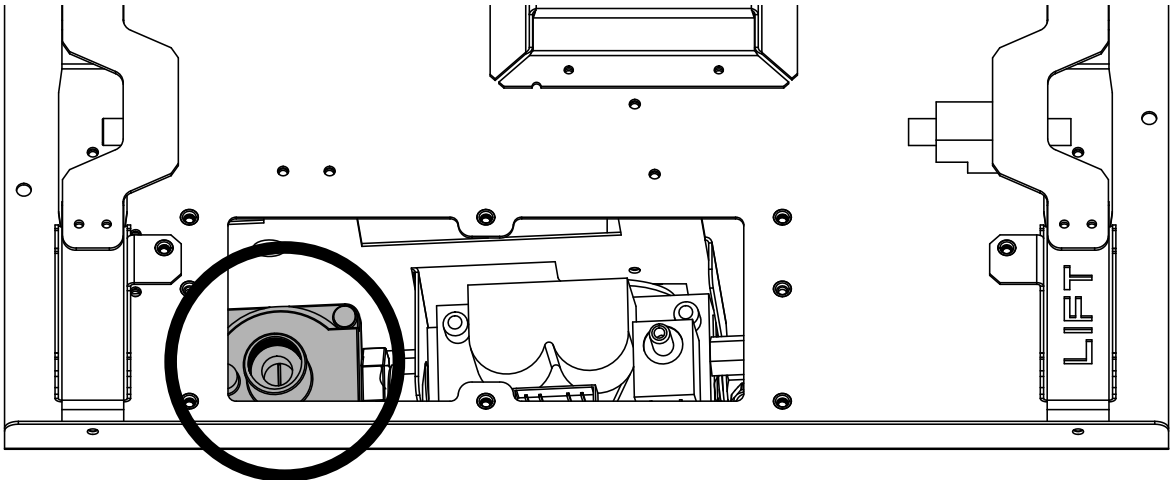

Once the operating pressure—post regulator—is set, remove the manometer tube from test point A. Be sure to close test point A. Open test point B and attach a manometer tube in preparation for measuring the operating pressure on high and low. This will be done together with changing the operating pressure from the APP (see next page).

NOTE: It is also possible to measure the operating pressure on high and low by attaching a manometer to one of the side burner jets. The measured pressure at the jet is generally slightly lower than at the test point. If this is done, TAKE CARE to have the middle and other side burner installed, otherwise gas may collect in the firebox, creating unsafe conditions.

GAS PRESSURE TABLE - MODE KB1150	Gas Type	
	Natural Gas	ULPG/ Propane
Minimum Inlet Pressure - Pre-Regulator	1.13 kPa	2.75 kPa
Maximum Inlet Pressure - Pre-Regulator	5.00 kPa	5.00 kPa
Operating Pressure - Post-Regulator (Point A)	1.00 kPa	2.30 kPa
Operating Pressure on High - (Point B)	0.78 kPa ±5%	1.80 kPa ±5%
Operating Pressure on Low - (Point B)	0.30 kPa ±5%	0.90 kPa ±5%

GAS PRESSURE TABLE - MODE KB1400	Gas Type		
	Natural Gas	Propane	ULPG
Minimum Inlet Pressure - Pre-Regulator	1.13 kPa	2.75 kPa	2.75 kPa
Maximum Inlet Pressure - Pre-Regulator	5.00 kPa	5.00 kPa	5.00 kPa
Operating Pressure - Post-Regulator (Point A)	1.00 kPa	2.30 kPa	2.30 kPa
Operating Pressure on High - (Point B)	0.82 kPa ±5%	1.98 kPa ±5%	1.68 kPa ±5%
Operating Pressure on Low - (Point B)	0.40 kPa ±5%	0.93 kPa ±5%	1.04 kPa ±5%

GAS PRESSURE TABLE - MODE KB1650	Gas Type	
	Natural Gas	ULPG/ Propane
Minimum Inlet Pressure - Pre-Regulator	1.13 kPa	2.75 kPa
Maximum Inlet Pressure - Pre-Regulator	5.00 kPa	5.00 kPa
Operating Pressure - Post-Regulator (Point A)	1.00 kPa	2.30 kPa
Operating Pressure on High - (Point B)	0.67 kPa ±5%	1.67 kPa ±5%
Operating Pressure on Low - (Point B)	0.34 kPa ±5%	0.82 kPa ±5%

Changing the Operating Pressure (Service Mode - APP ONLY)

While the remote is in its “OFF” mode with only the time showing on the display, use the service-mode login to enter gas fitter settings. Tap “Gas adjustment”. Follow the on screen prompts to start the fire in gas setting adjust mode. Fireplace must be connected to the APP (see section D2).

NOTE: IF YOU REQUIRE A SERVICE-MODE LOGIN PLEASE FOLLOW STEPS IN SECTION S4

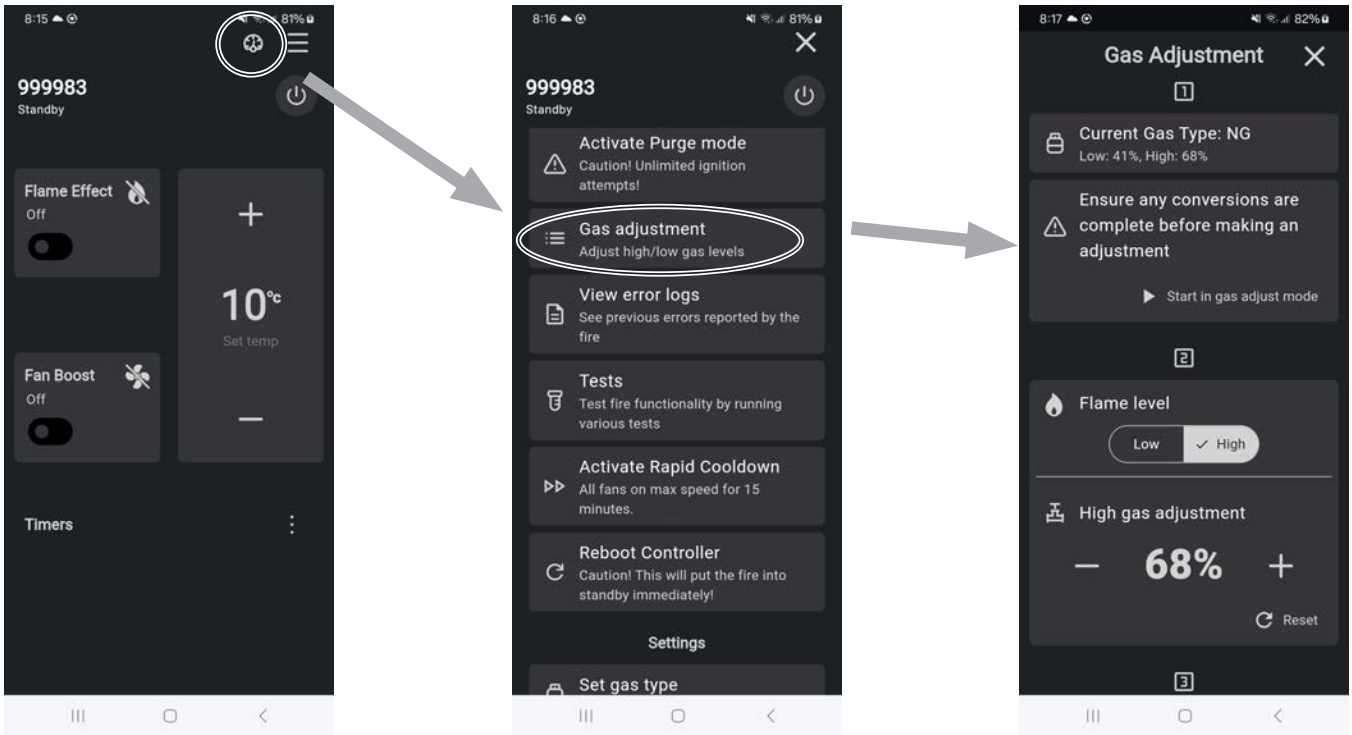

WAIT! Allow the appliance to fully light all burners before continuing.

The high setting for the currently set gas type is displayed first. Pressing the ‘+’ or ‘—’ keys will change the setting up or down, respectively, which will change the gas pressure measured at point B.

NOTE: The numbers displayed on the APP should only be used to achieve the correct pressure. The numbers by themselves do not represent anything and should not be relied upon.

Toggling to the low setting is done by pressing the “Low” button. Adjustments are made with the ‘+’ and ‘—’ buttons as above.

NOTE: When setting low, allow a tolerance of ±0.05 kPa

When pressures are set, exit this mode.

NOTE: This is a powerful gas heater that, on the lowest setting (effect only), will still generate approximately 50% heat.

IMPORTANT: Ensure that the test points are CLOSED and the hatch is replaced before re-assembling the fire.

E6 Gas Type Conversion

This appliance can be configured to operate on NG, ULPG, or Propane. If gas type conversion is required, please contact an Escea dealer to request the required parts.

Gas Specific Configurations

	Mode KB1150				
	Jets			Burner Collars	
	Middle Burner	Side Burners	Pilot	Middle Burner	Side Burners
Natural Gas	1.95 mm	1.50 mm	#37	1 x 3.5 mm	Fully Closed
ULPG	1.30 mm	0.85 mm	#27	Spacer	2 x 7 mm
Propane	1.30 mm	0.85 mm	#27	2 x 12 mm	2 x 4 mm

	Mode KB1400				
	Jets			Burner Collars	
	Middle Burner	Side Burners	Pilot	Middle Burner	Side Burners
Natural Gas	1.95 mm	1.70 mm	#37	1 x 6 mm	1 x 3.5 mm
ULPG	1.25 mm	1.02 mm	#27	Spacer	2 x 8 mm
Propane	1.30 mm	1.02 mm	#27	2 x 13 mm	2 x 7 mm

	Mode KB1650				
	Jets			Burner Collars	
	Middle Burner	Side Burners	Pilot	Middle Burner	Side Burners
Natural Gas with Crystalite or Coals	2.10 mm	2.10 mm	#37	Fully Closed	Fully Closed
Natural Gas with All Logs	2.10 mm	2.10 mm	#37	1 x 3.5 mm	1 x 3.5 mm
ULPG	1.20 mm	1.10 mm	#27	Spacer	2 x 7 mm
Propane	1.20 mm	1.10 mm	#27	2 x 12 mm	2 x 4 mm

WARNING!

TURN THE GAS AND POWER SUPPLIES OFF.

Follow the instructions outlined in “E5 Checking the Gas Operating Pressure” on page 28 to access the burners, jets, and regulator.

Change the burner jets and the pilot jet to those supplied in the kit set (see table above).

NOTE: Ensure the pilot jet is joined up to the olive before inserting the jet into the pilot assembly (as shown below).

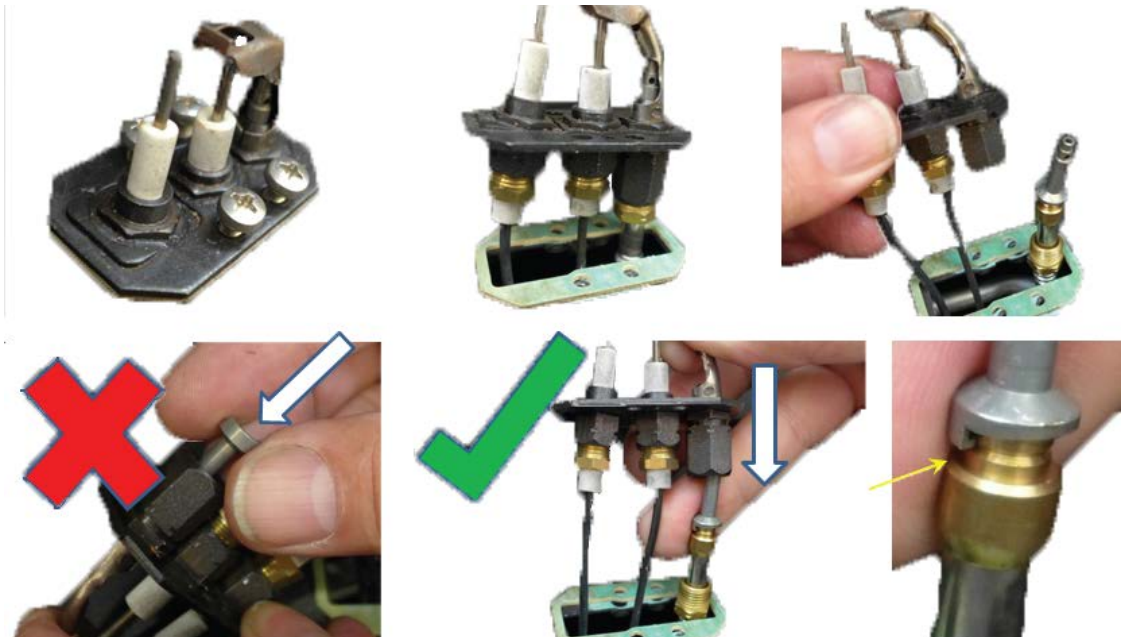

Change the burner collars to the ones supplied in the kit set (see table above).

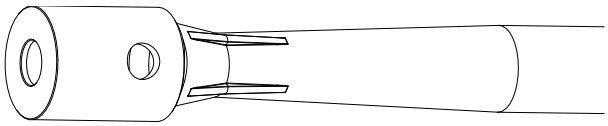

Screw out the nylon adjuster screw inside the regulator to remove the existing spring. Replace the spring with the one supplied in the conversion kit and reassemble the regulator.

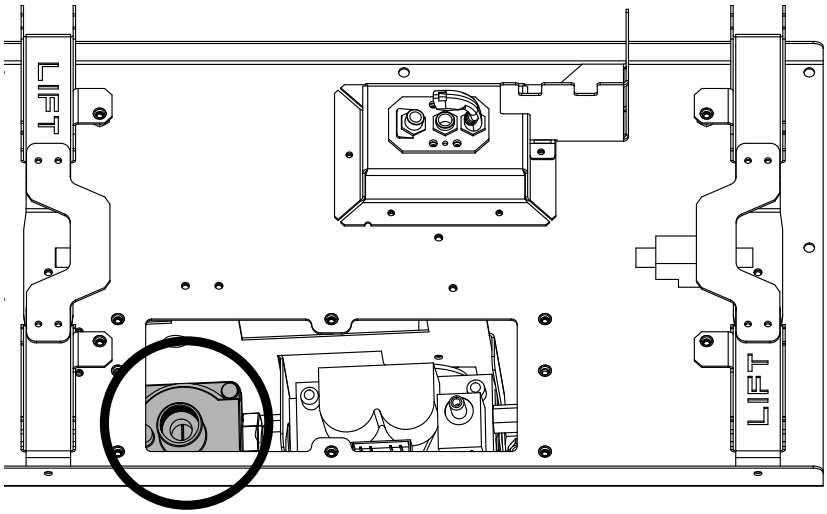

Stick the new gas type label supplied in the kit set on the underside of the tray hatch. Ensure the serial number and date of manufacture are still visible. Write your name, company (if appropriate) and date of conversion on the new label with permanent marker.

Ensure the gas supply is still OFF, turn the power supply ON.

Change the operating pressure.

IMPORTANT: IT IS NECESSARY TO CHECK AND CALIBRATE THE OPERATING PRESSURES AFTER DOING A GAS TYPE CONVERSION. THIS CAN BE DONE BY FOLLOWING THE INSTRUCTIONS IN "E5 CHECKING THE GAS OPERATING PRESSURE" ON PAGE 28.

E7 Auxiliary On/Off button

The auxiliary on/off (AUX) button is used to turn the fireplace on without the remote control. For information on pairing a new remote control, see section S6 on page 62 of the service manual at the end of this document.

To access the AUX button, remove the bottom trim by lifting the trim upwards then sliding out (as shown in the diagram below). Take care not to scratch the glass or side trims.

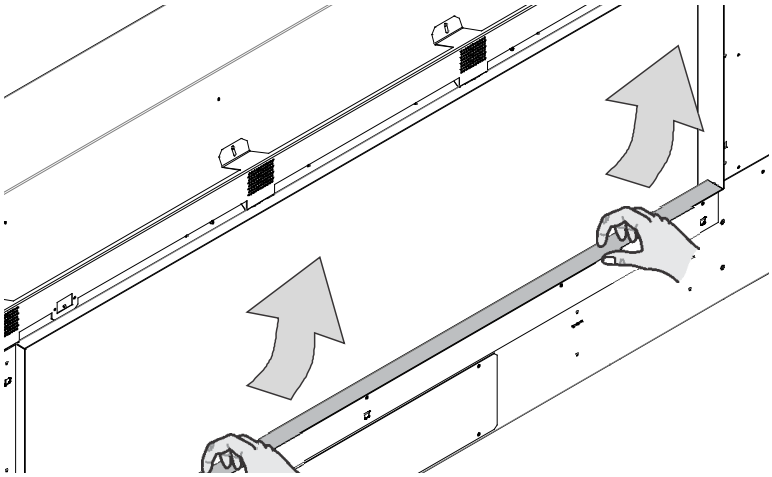

The AUX button location can be seen in the diagram below.

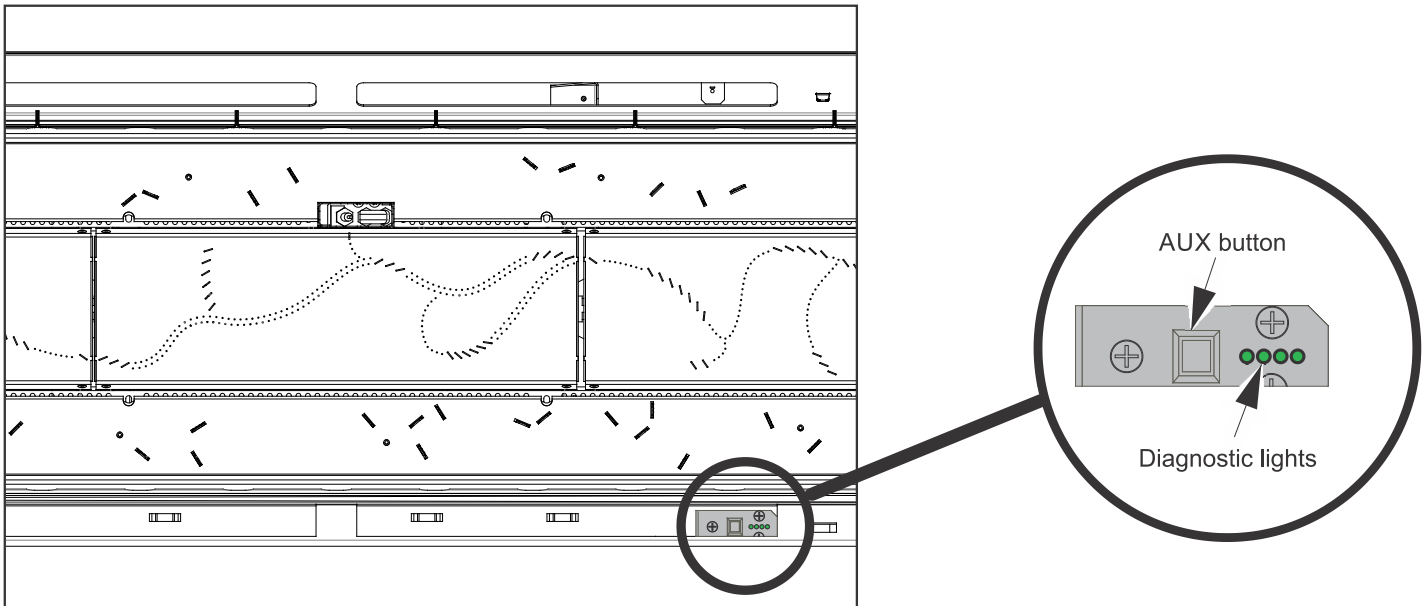

E8 Home Automation Setup - Optional

Escea K-Series fireplaces have a simple interface for connection to a home automation system. This allows the fireplace to be woken up, started, and then shut down. The “Close to Wake” connection (shown below) is essentially taking one of the 3.3 V DC pins on the fireplace micro controller and shorting it to ground.

In order to isolate the fireplace from the automation system, a relay needs to be used (as shown). This allows you to keep the fireplace’s 3.3 V supply isolated.

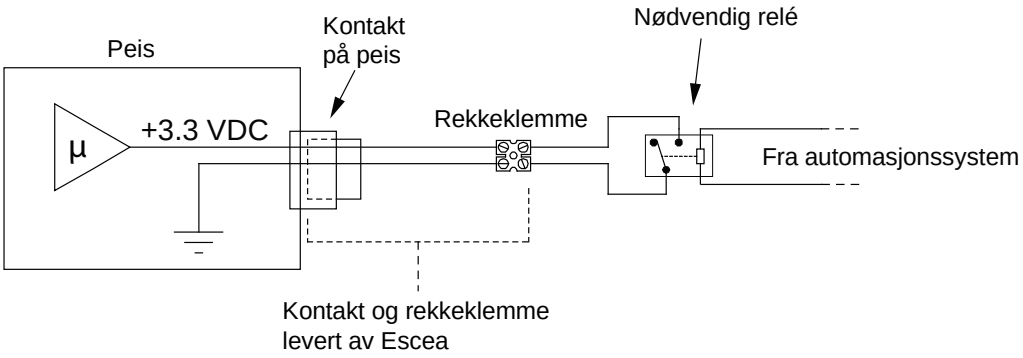

The home automation connection (shown below) can be ordered separately from your Escea dealer

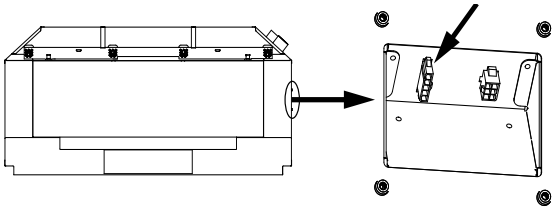

808157 Escea DS/KS/DN/KB Home Automation Cable

This connects to the fireplace via the middle of the side panel of the fireplace, next to the powerflue cable, as shown in section D3 on page 24.

Home Automation Operation

Relay closed

The fireplace will start in a medium setting until the remote control talks to the fireplace and picks up the 'ON' signal (which can take up to 4 minutes). Once the remote has communicated with the fireplace it will turn on and begin operating thermostatically. The remote will use whatever temperature the user has previously set and cannot be altered by the home automation system. The fireplace will continue to operate while the relay is closed.

NOTE: If the fireplace cannot communicate with the remote within 10 minutes of the relay contact closure then the fireplace will shut down and return to standby. The remote controller is required to be within operating range of the fireplace for its safe operation.

Relay open

If the fireplace is operating with a closed relay then, upon opening the relay contacts, the fireplace will shut down and return the remote controller to its standby mode when it next updates (which can take up to 4 minutes). While the relay is open the fireplace will be in standby mode and available for manual operation by the user

END OF SECTION E

BY THE END OF THIS SECTION, YOU SHOULD HAVE:

- ◯ **The appliance installed in the cavity**
- ◯ **The appliance fixed to the cavity base and wall lining**
- ◯ **The appliance plugged into a mains electricity supply**
- ◯ **The appliance gas supply attached and pressure tested with all other gas appliances running**

F FINISHING THE INSTALLATION

F1 Log and Woodland Log Fuelbed Retainer Setup

When setting up a log or woodland log fuel bed, you must have the correct retainers present before assembling the fuel bed. The correct retainers are supplied with the fuel bed packaging. On your retainers you will see either a letter at the start that will determine the fuelbed type (i.e. W = Woodland, L = Logs). The letters and numbers that follow help to determine the retainer location.

Remove the infill by following section E4 on page 28. Place the infill upside down with the hole for the pilot on the side furthest from you; this is the back (for the KB1400, place the pilot on the side closest to you). Remove the retainers from the flat nested sheet. When reading the text on each retainer, fold ALL the retainer tabs 90° away from you.

For some older infills, on the UNDERSIDE of the infill you may see numbers from 1 to 4. If the infill has numbers, then match the numbers on the infill with the numbers on the log retainers. For all other infills, the combination of letters and numbers provides an indication of the location: B- Back, F- Front, L-Left, R-Right. The infill for the KB1400 Log installation is shown below as an example.

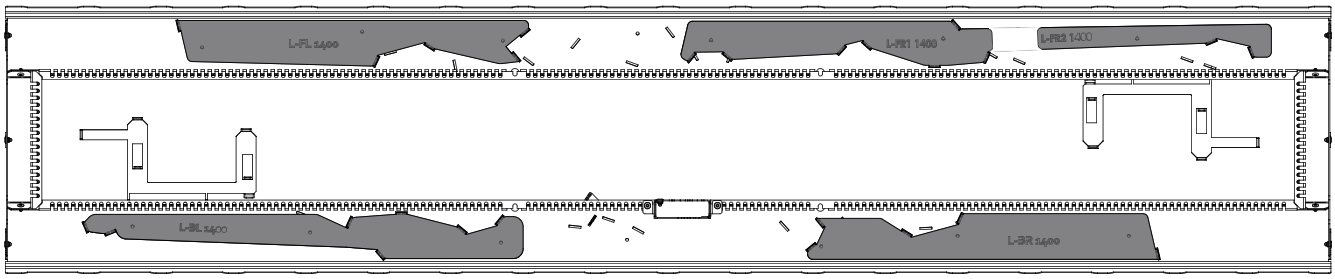

Attach all retainers by feeding the tabs from the UNDERSIDE (unpainted side) through the cutouts on the infill. Fix each retainer in place from the top of the infill with the screws provided.

Replace the infill and burners in the fireplace.

Only for the log fuelbed:

The final log retainers are placed on top of the infill and burners to support the end log (number 2 from index). This part comes in flat form and is to be folded as per the images that follow.

They are then installed on both outer sides of the infill and are fixed in place by 2 screws as below.

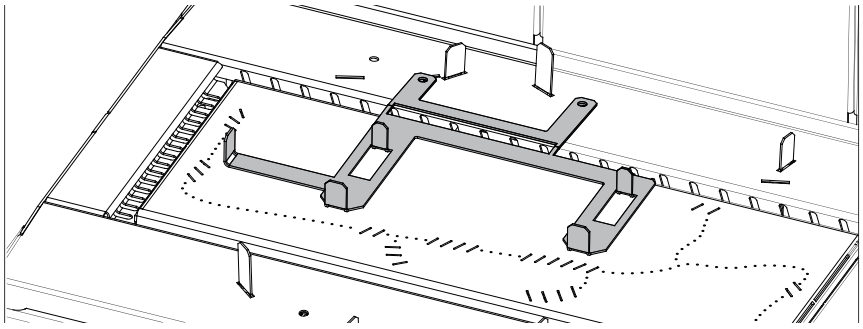

F2 Log Fuelbed Installation

Logs must be located correctly as stated/depicted in this section.

The final layout should replicate the last picture shown in each fuelbed size. Place the embers or flakes in a single even layer after the logs have been located correctly (excess embers or flakes should NOT be added if one even layer has been achieved). The embers or flakes must not cover the pilot or pilot guard. If ignition to the main burner is unsatisfactory please move embers away from the pilot cross lighting ports

Note: Improper positioning of any fuelbed media may create carbon build-up and will alter the unit's performance. Malfunctions due to improper fuel media placement will not be covered under warranty.

Log Index

Use the index above as a guide for selecting the correct logs.

Log Setup KB1150

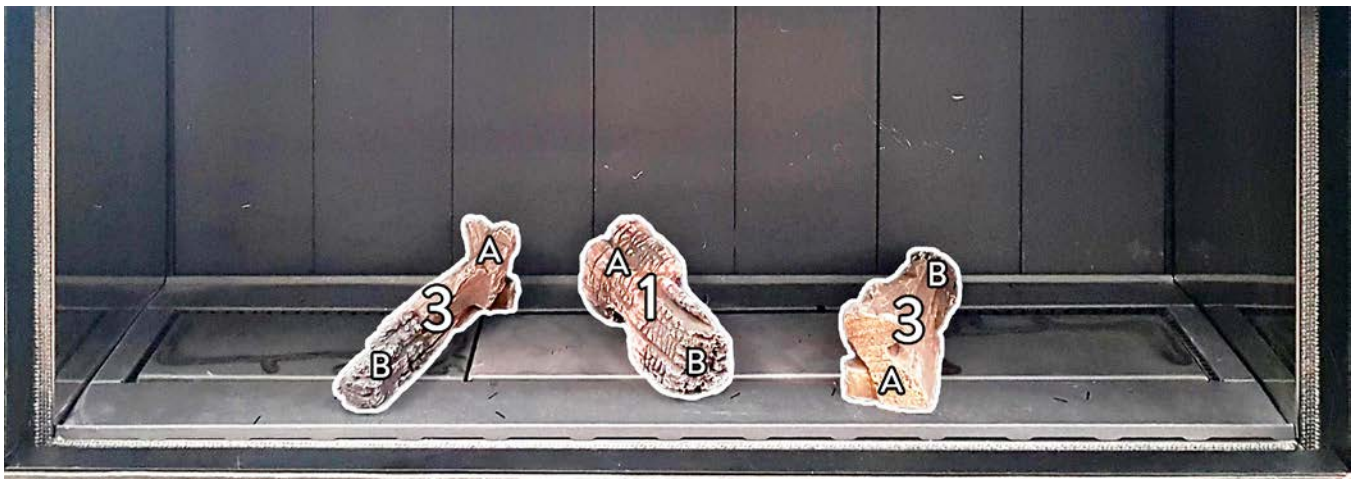

Log Setup KB1400

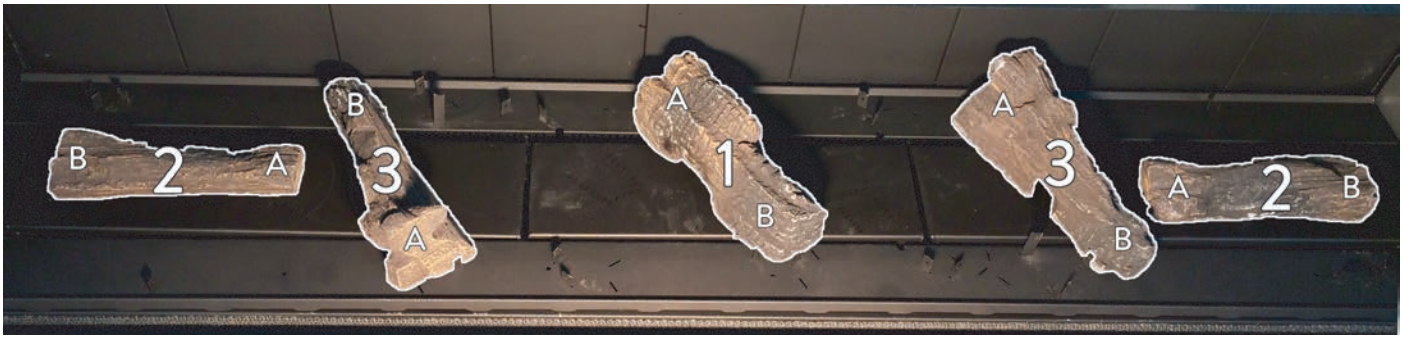

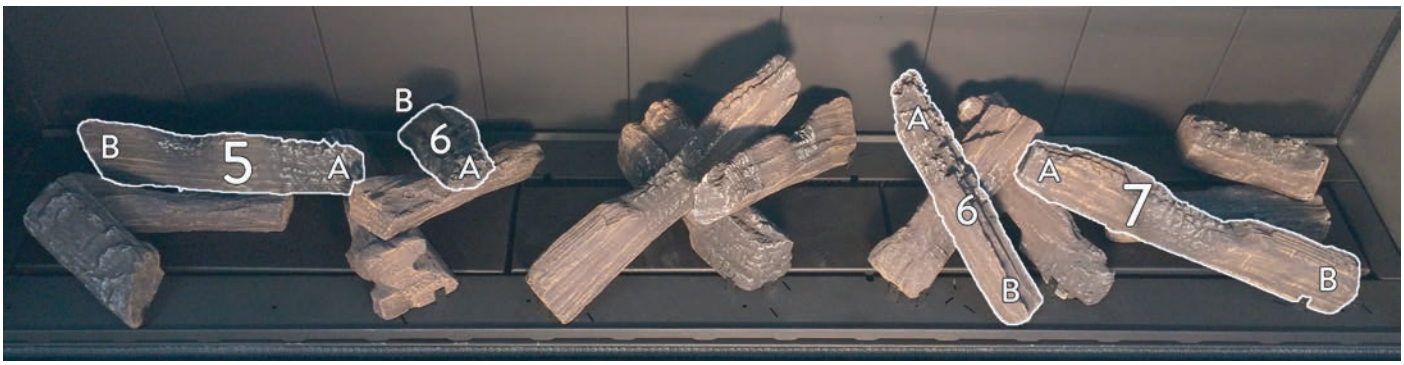

Log Setup KB1650

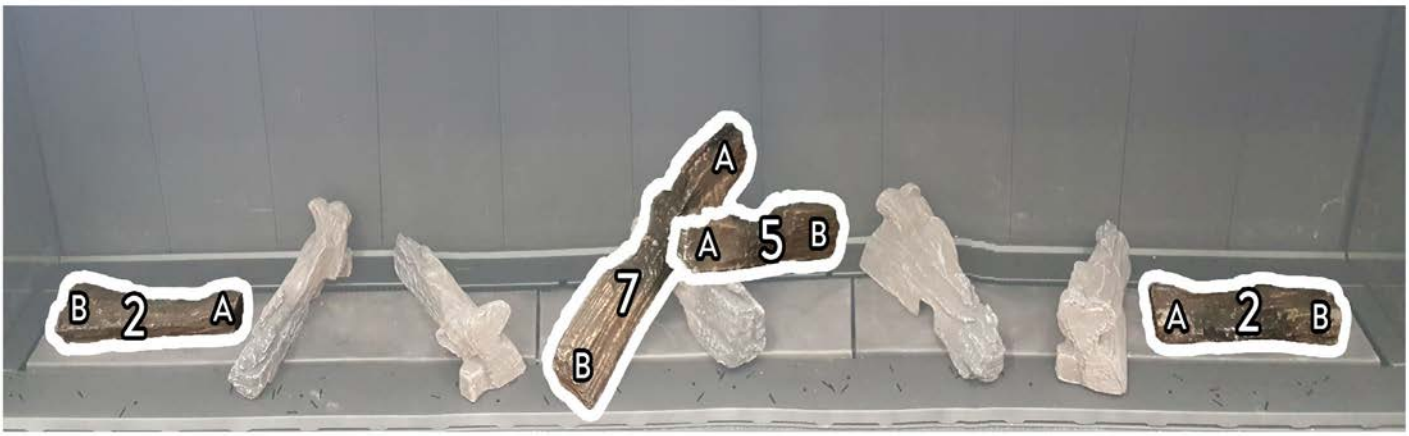

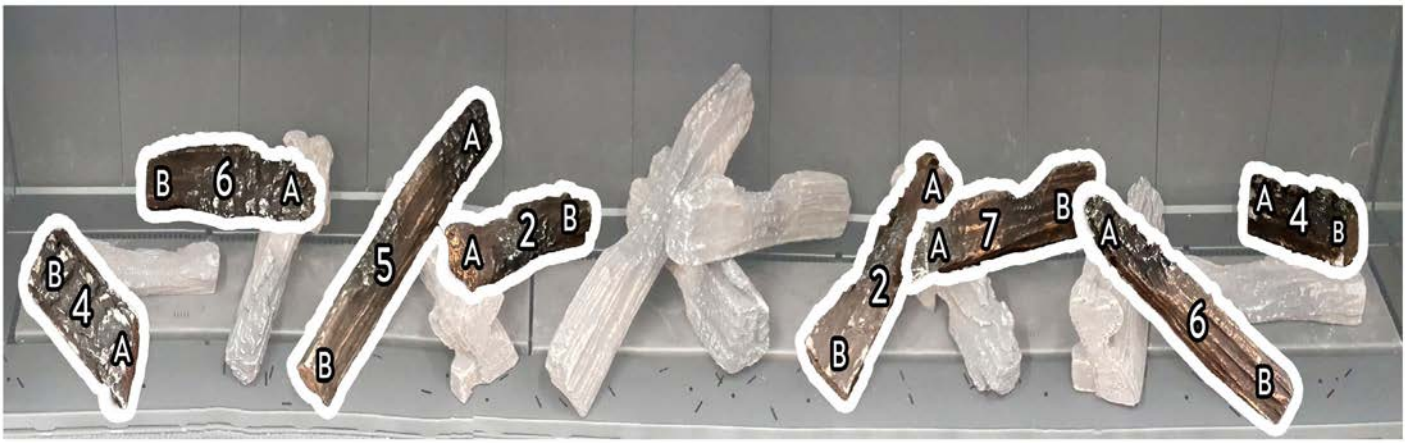

F3 Woodland Fuelbed Installation

Woodland Log Index

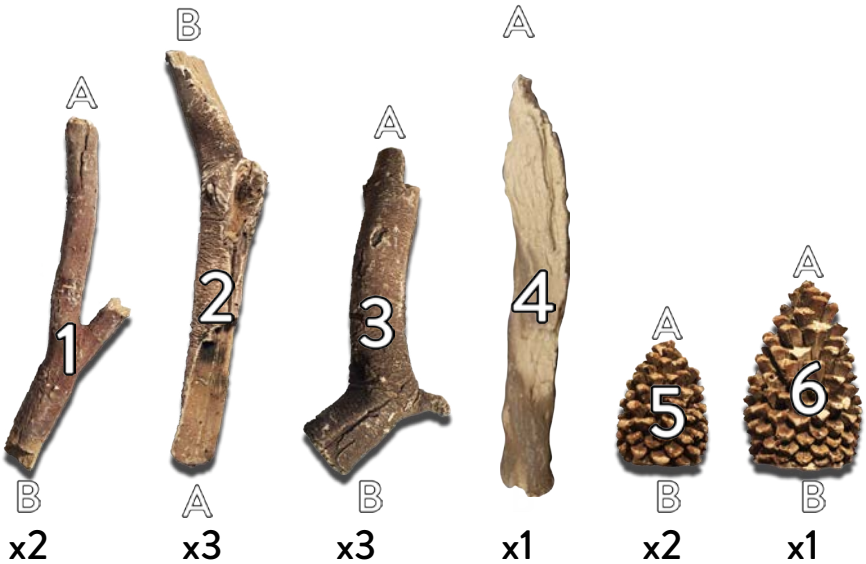

Use the index above as a guide for selecting the correct logs. Place the flakes in a single layer evenly after the logs have been located correctly (excess flakes should NOT be added if one even layer has been achieved). The flakes must not cover the pilot or pilot guard.

Woodland Log Setup KB1150

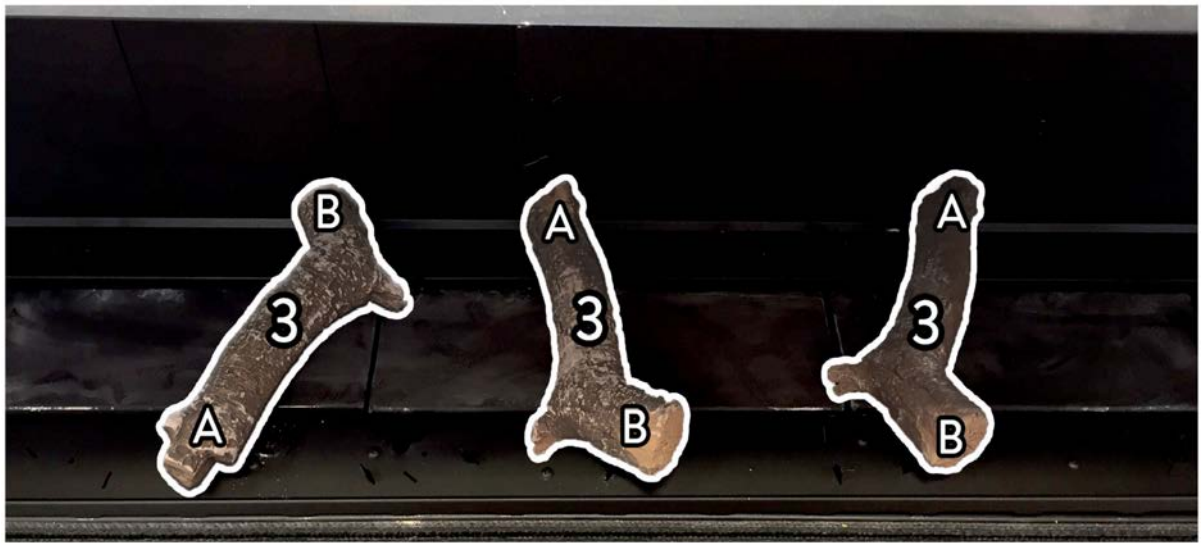

Woodland Log Setup KB1400

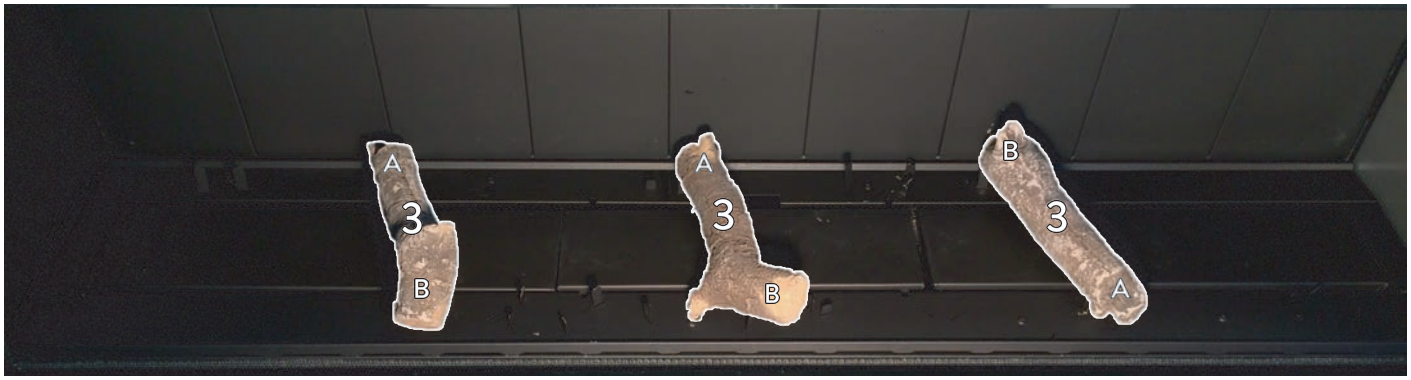

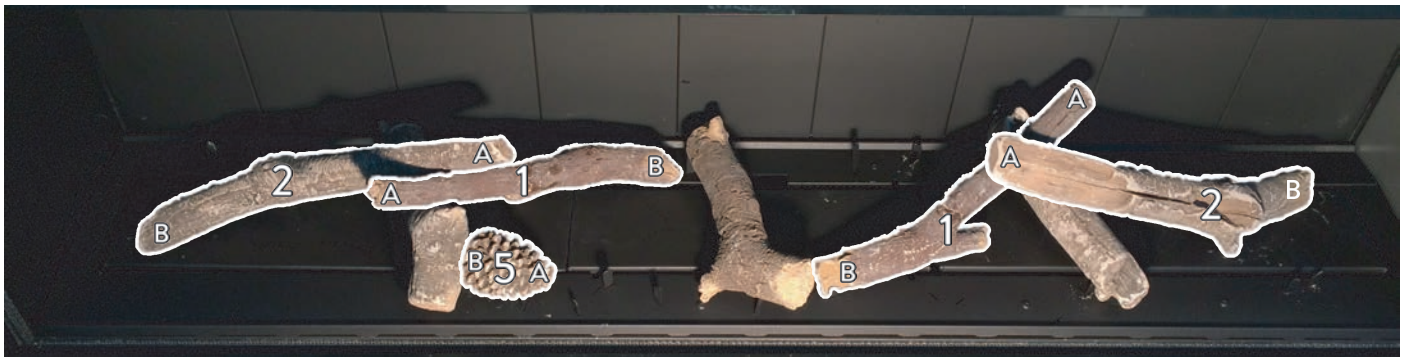

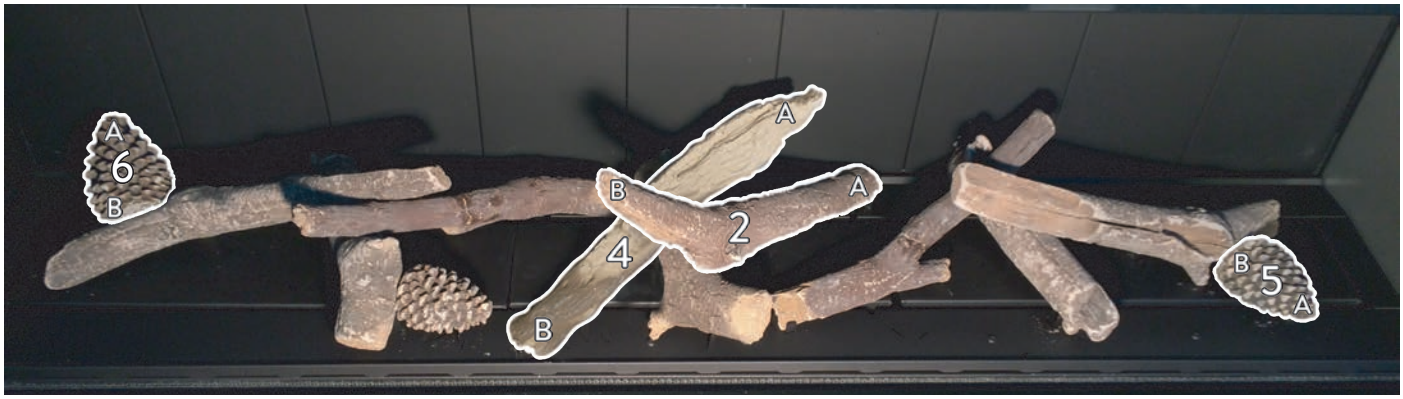

Woodland Log Setup KB1650

F4 Australian Oak, and Driftwood Fuelbeds

The Australian Oak and Driftwood retainers are identified by number. These retainers ordered left to right, front to back when positioning on the infill for install. For more information, please see the fuel bed instructions provided along with the fuel bed and the retainer sets. These retainers sit on top of the infill and are attached with a black screw.

Previously, the splitwood and driftwood fuelbed retainers have lettering cut into them to show the position on the infill that they sit. If you receive the previous version of fuel bed retainers, please refer to the previous naming convention below.

- FM - Front Middle; RM - Rear Middle; FMR - Front Middle Right; FML - Front Middle Left
- RML - Rear Middle Left; RMR - Rear Middle Right; RLH - Rear Left Hand; RRH - Rear Right Hand
- FLH - Front Left Hand; FRH - Front Right Hand; FM1 - Front Middle 1; FM2 - Front Middle 2

F5 Australian Oak Fuelbed

Place the embers in a single even layer after the logs have been located correctly (excess embers should NOT be added if one even layer has been achieved). The embers must not cover the pilot or pilot guard. If ignition to the main burner is unsatisfactory please move embers away from the pilot cross lighting ports

Note: Improper positioning of any fuelbed media may create carbon build-up and will alter the unit's performance. Malfunctions due to improper fuel media placement will not be covered under warranty

NOTE: The holes in the infill that have a Diamond next to them are for fixing the Australian Oak Retainers.

KB1150 Australian Oak Setup

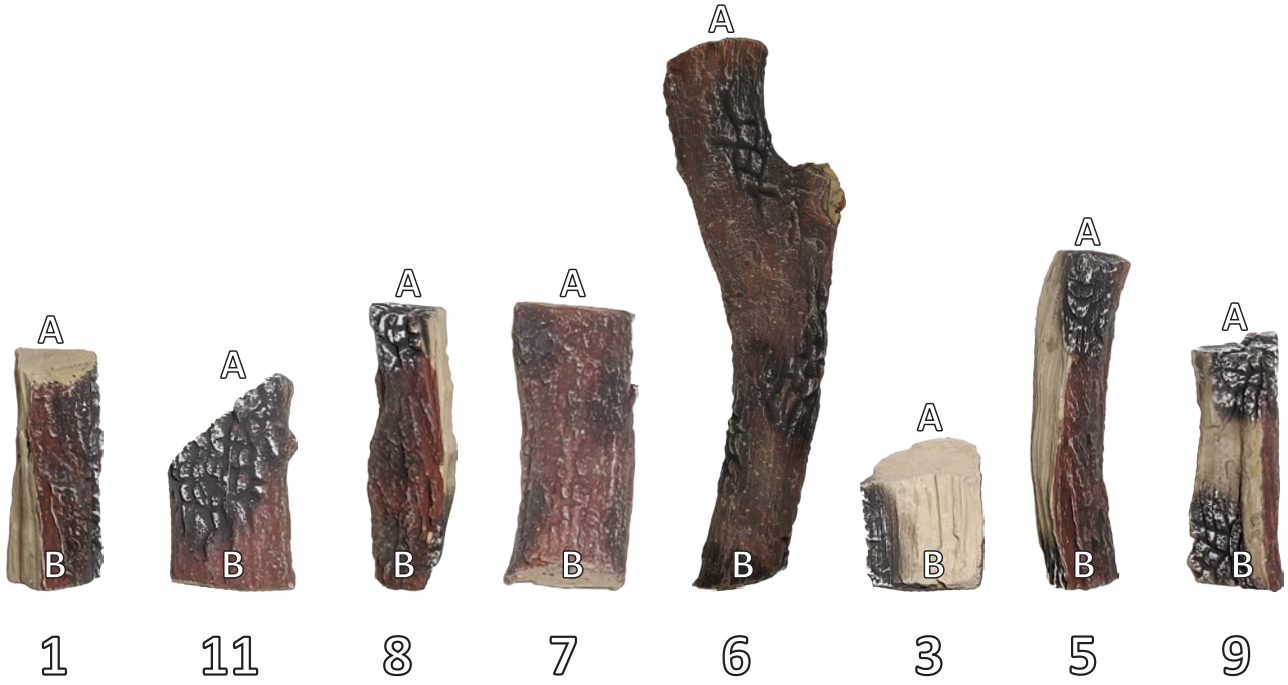

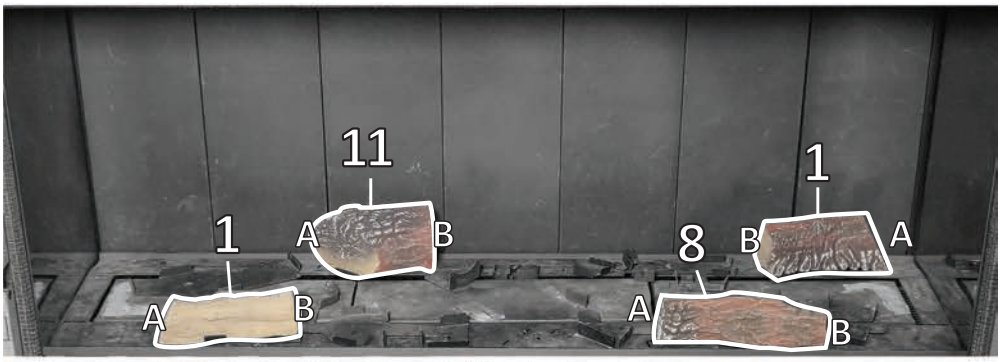

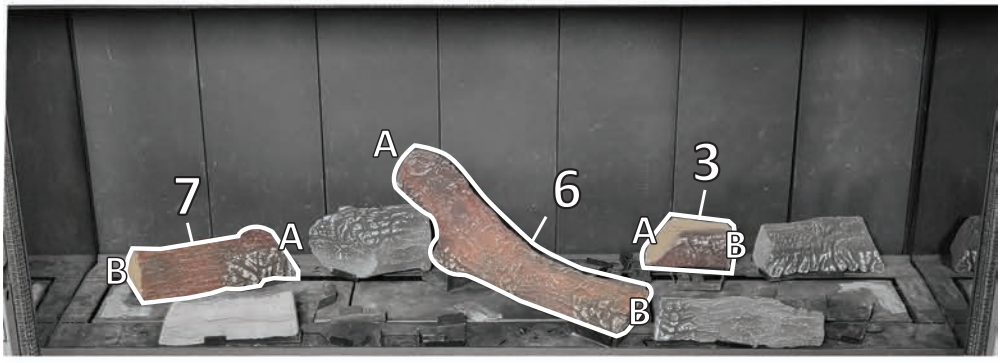

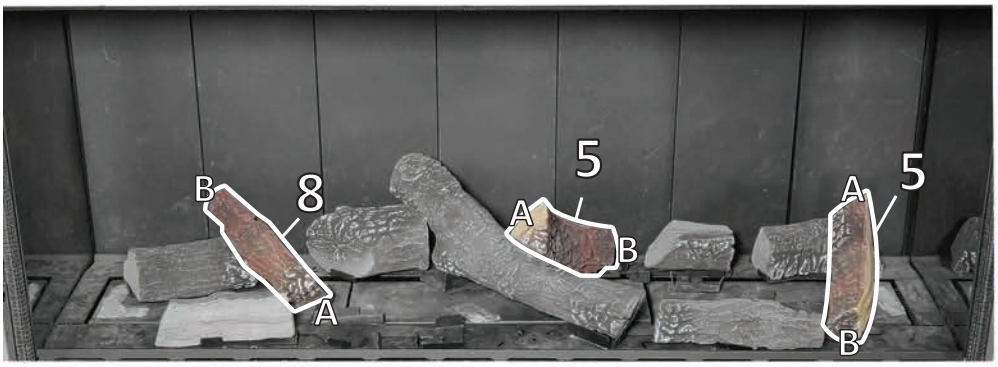

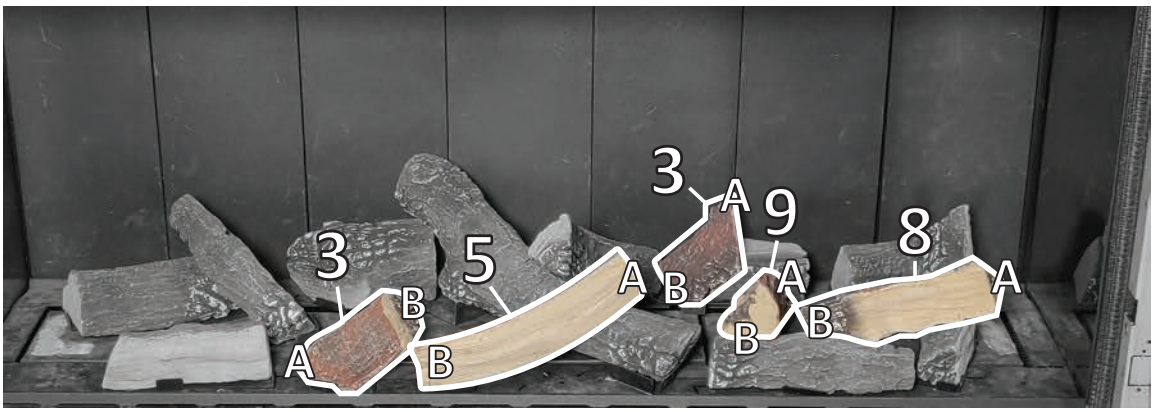

KB1400 Australian Oak Setup

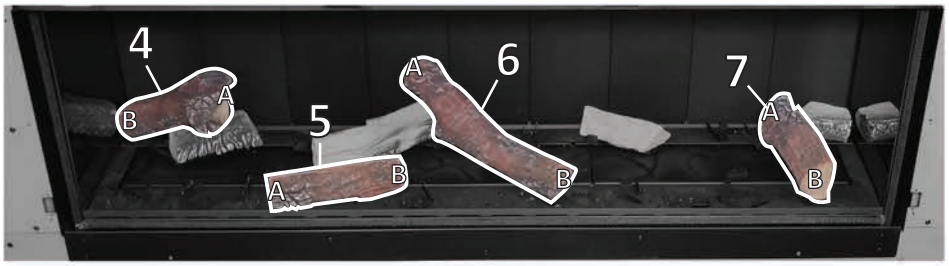

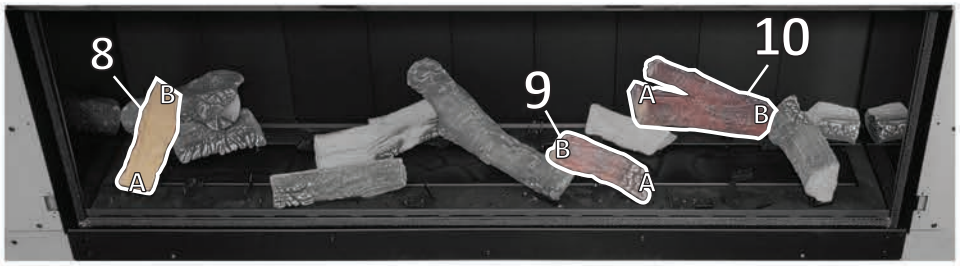

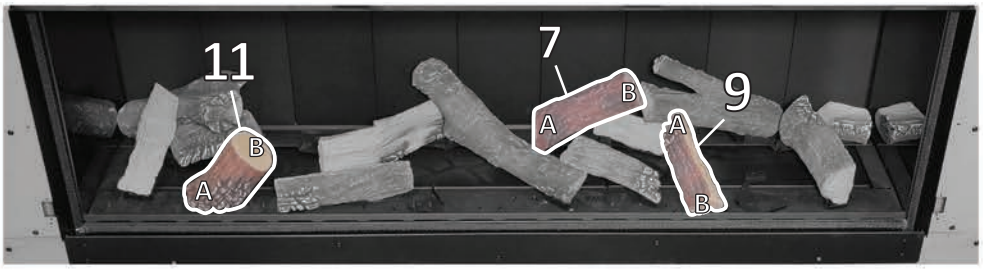

KB1650 Splitwood Setup

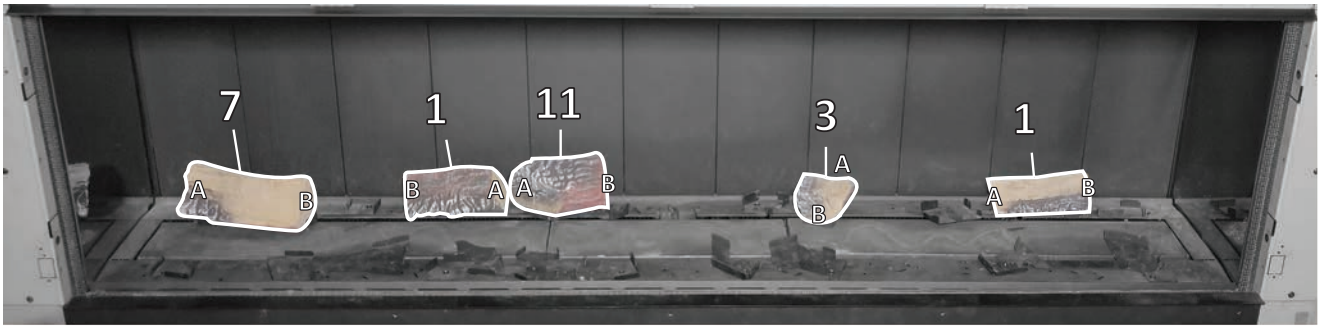

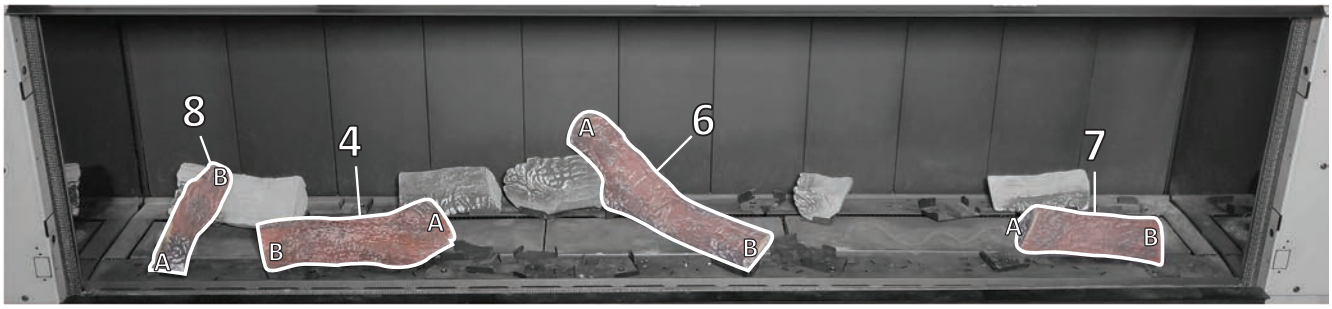

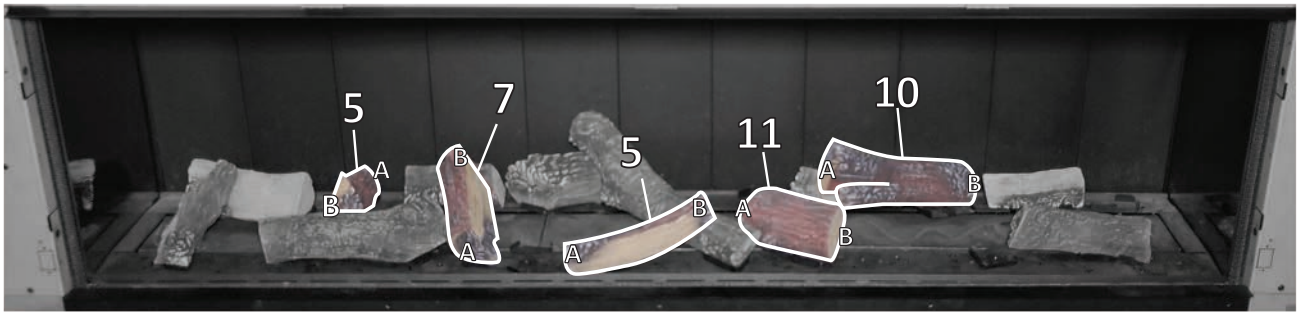

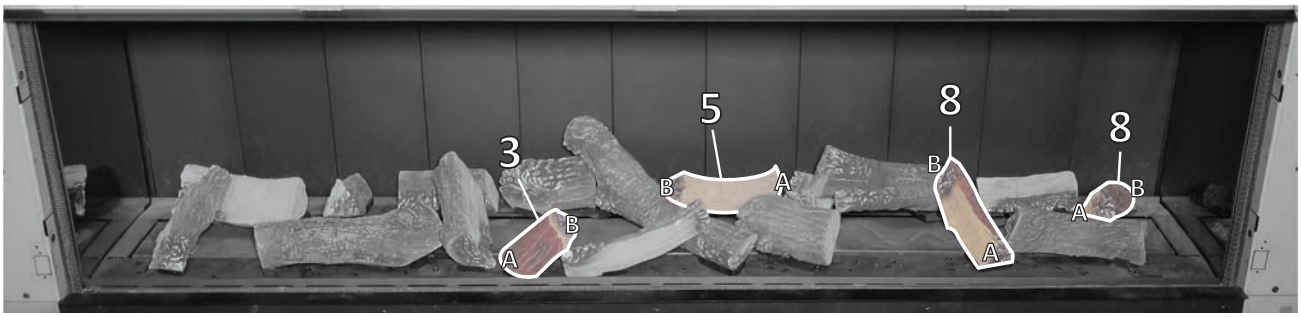

F6 Driftwood Fuelbed

After the logs have been located correctly, place the embers in a single even layer in the dark grey area as indicated below and then place the shale in the light grey area as indicated (excess embers or shale should NOT be added if one even layer has been achieved). The embers or shale must not cover the pilot or pilot guard. If ignition to the main burner is unsatisfactory please move embers away from the pilot cross lighting ports

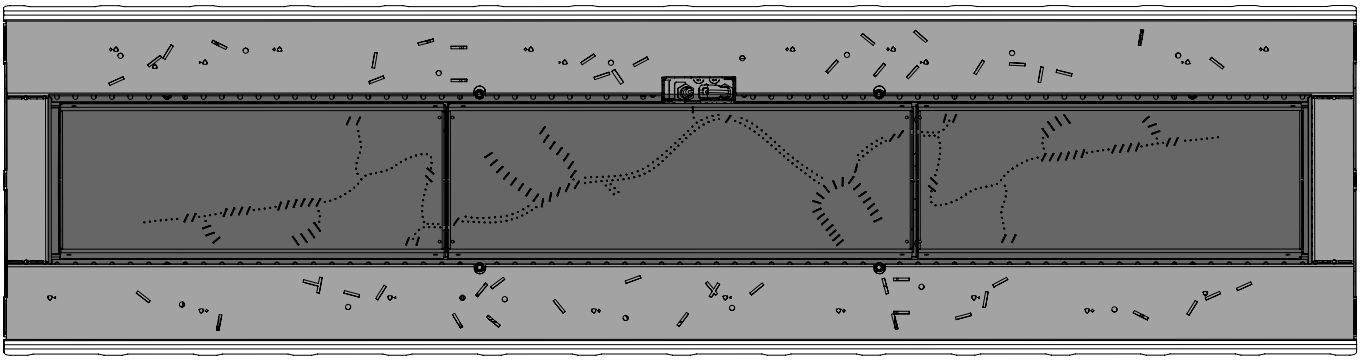

Note: Improper positioning of any fuelbed media may create carbon build-up and will alter the unit's performance. Malfunctions due to improper fuel media placement will not be covered under warranty

NOTE: The holes in the infill that have a Triangle next to them are for fixing the Driftwood Retainers.

KB1150 Driftwood Setup

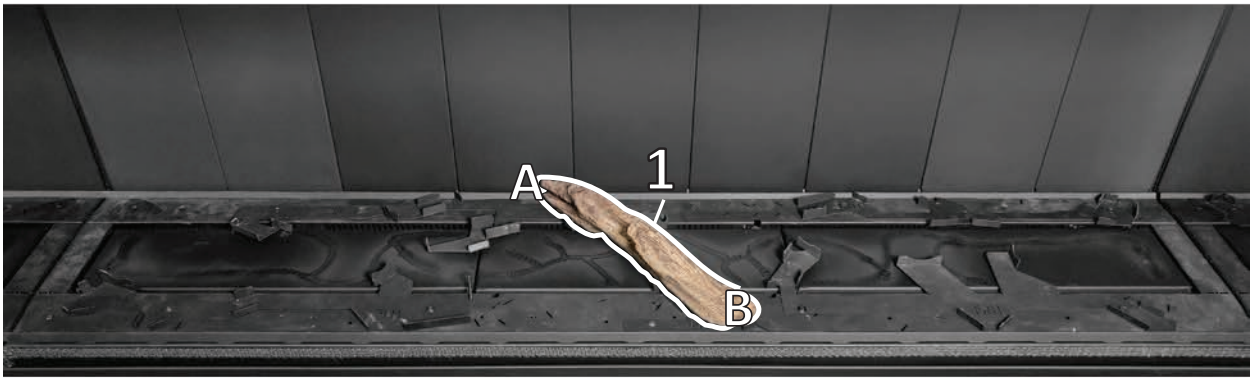
A
1
B

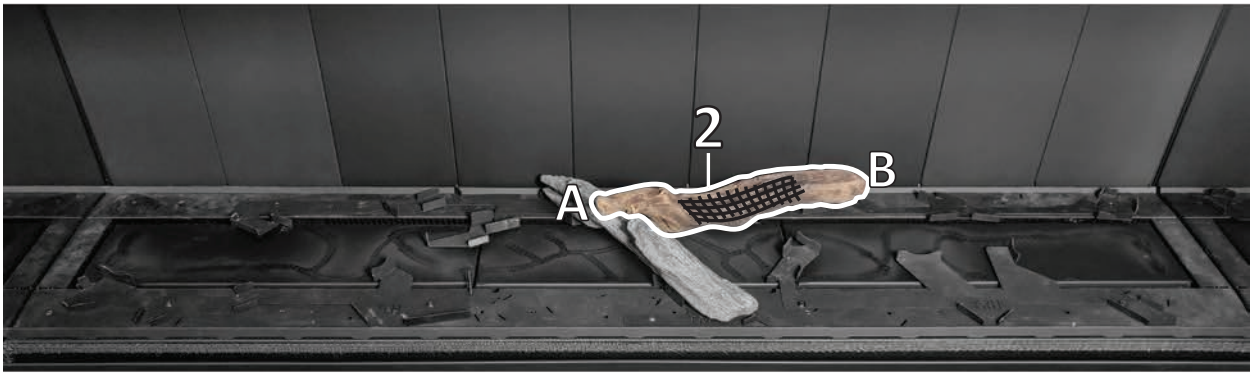
2
A
B

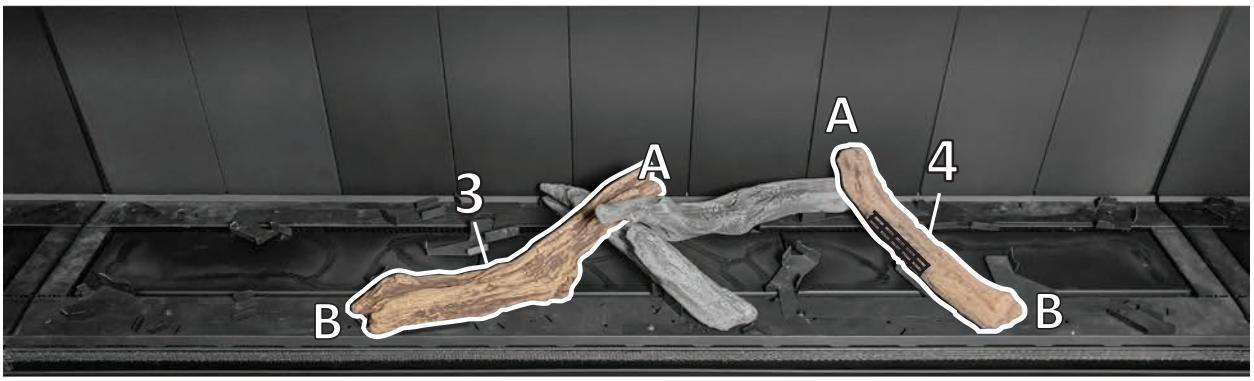
A
4
A
3
B
B

6
B
5
A
A
B
7
B
A

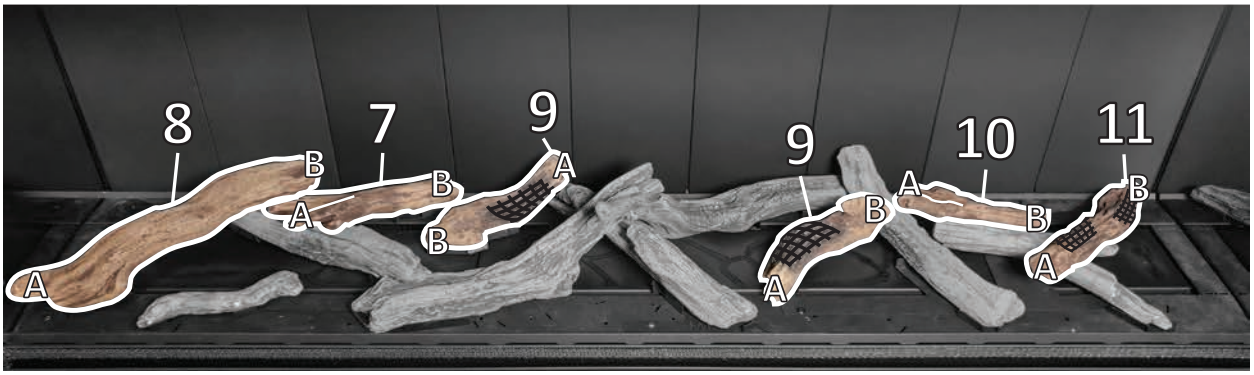
8
7
9
B
B
A
A
B
A
9
10
11
A
B
B
B
A
A

KB1400 Driftwood Setup

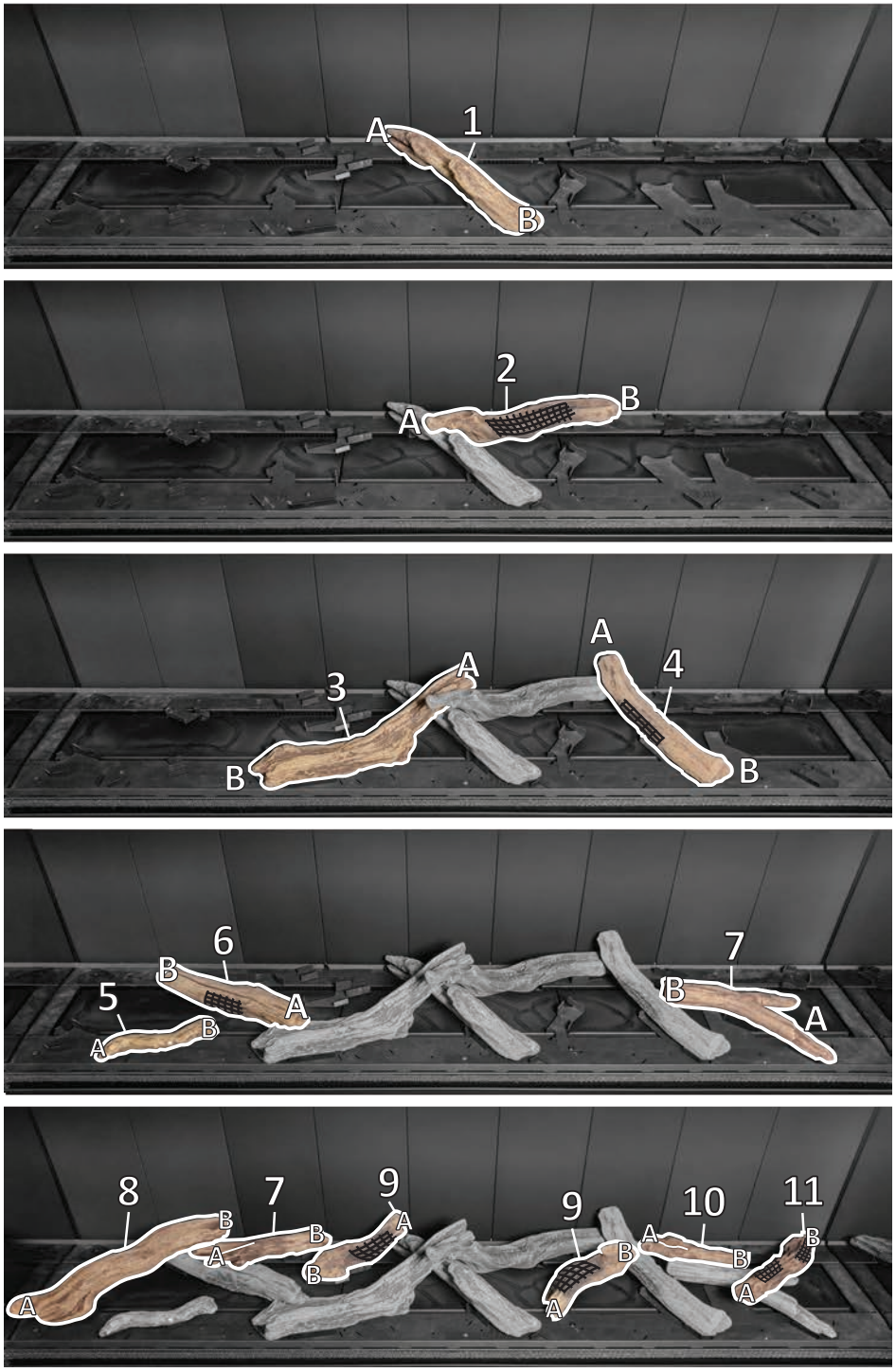

KB1650 Driftwood Setup

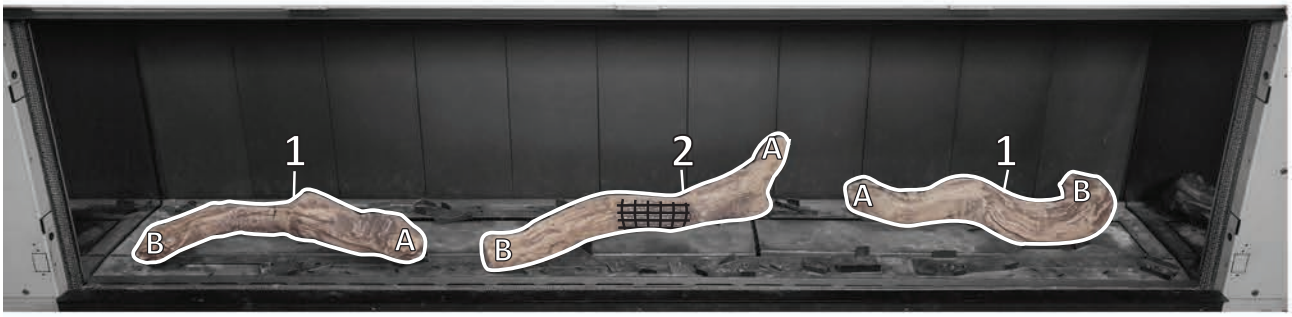

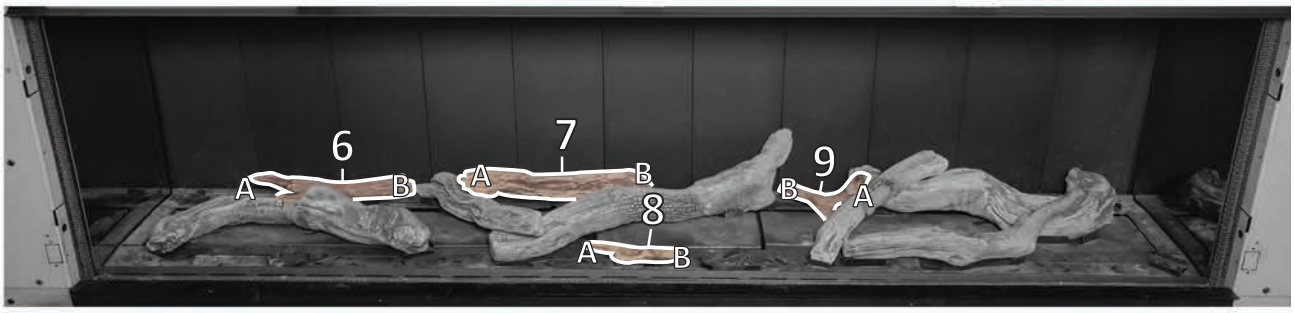

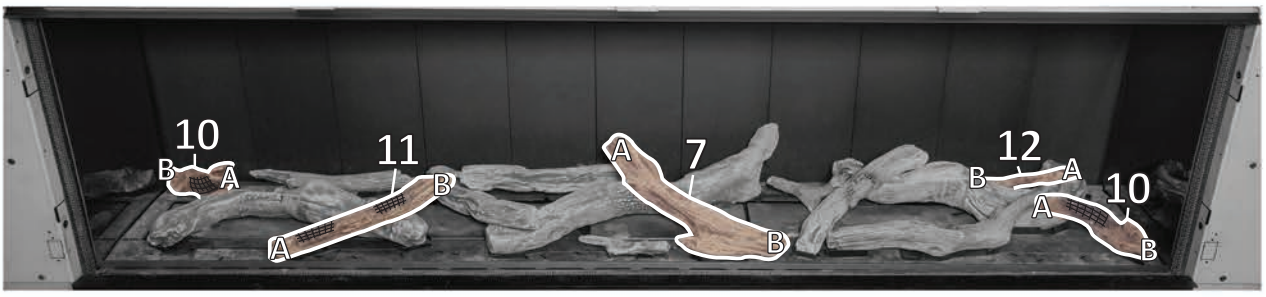

F7 Gem/Crystalight or Coal Fuelbed Installation

If using the crystalight or coal fuel beds, place all the crystalight/coal pieces in a single layer atop the burners and fuelbed tray. Cover the entire area except for the pilot shield, ensuring coverage right up to the edges of the firebox or glass.

Do not heap or mound any fuelbed.

F8 Flame Picture

An abnormal flame pattern will look long and stringy; it may cause soot to build up inside the firebox.

An abnormal flame pattern will likely be the result of incorrect settings (jet size, burner aeration collar). Check that these are correct before proceeding. If an abnormal flame pattern is still present, please contact Escea.

It is the responsibility of the installer to ensure a correct flame pattern.

F9 Wall Linings

The final wall lining can only be commenced after all previous applicable sections have been completed.

The appliance must be installed prior to and behind the finished wall surface. Allow clearance for any plasterboard, tiles, or other finishing materials that may be intended for the finished wall surface. Wall finishing materials must not encroach upon the minimum cavity clearances given in previous sections. The wall board that lines the outside of the opening can be normal plaster board and does not need to be non-combustible. The plasterboard is to protrude beyond framework as shown in the following diagram.

IMPORTANT: The final wall lining must not encroach within the specified dimensions in this section. These dimensions indicate the opening required in the wall lining. Encroaching on the minimum cut out dimension may inhibit the future serviceability of the fire.

The glass viewing area of the fire is bordered by a black metal trim. This acts as a junction between any wall linings and the viewing area. Combustible wall linings must not exceed this dimension and protrude past the black trim. Failure to follow these instructions may risk damage to the adjacent wall lining. The wall lining needs to be 5mm (+/-2mm) from the black reveal.

(Dimensions shown right include the 5mm)

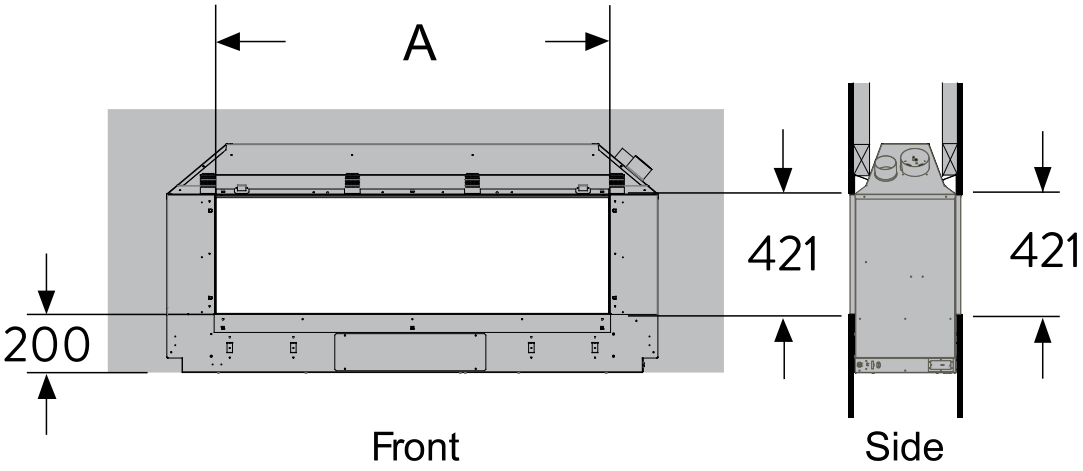

MODEL	A
Mode KB1150	**1081**
Mode KB1400	**1373**
Mode KB1650	**1665**

If the wall lining used protrudes past the top trim, non-combustible material MUST be used (see image below, dashed line represents edge of trim).

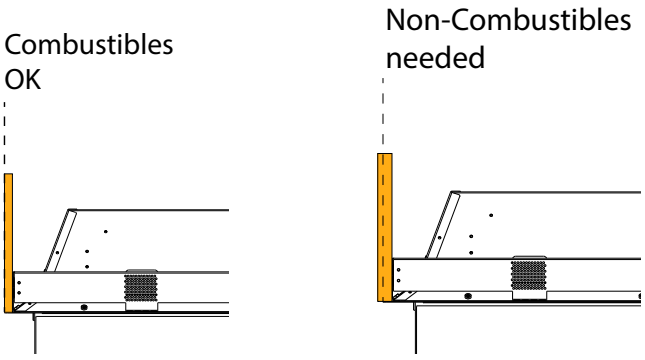

NOTE: The wall lining directly above the appliance will get warm and hence may discolour paint finishes that are susceptible to temperature damage. The heat may also distort vinyl wall coverings. For durability of finishes and surfaces you should contact the relevant manufacturer for their specification and avoid materials with temperature ratings not suitable for use above a fireplace.

The wall lining can be fixed to the wall lining fixing bracket (shaded below). There are multiple areas on the bracket (circled below) that can be used for fixing screws.

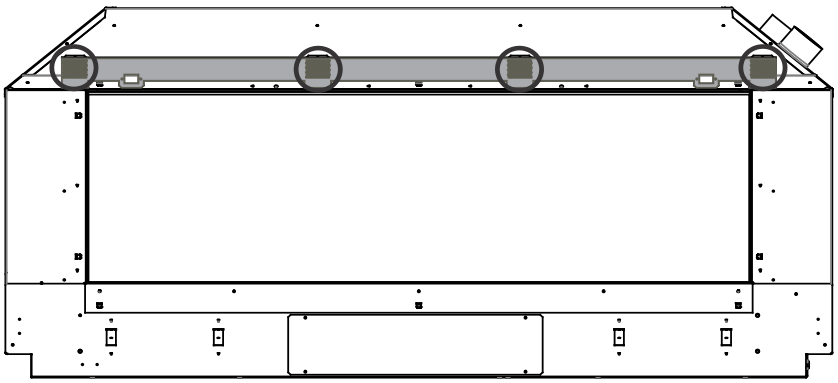

Frameless wallboard finish

For 10mm-20mm wall linings, an optional “Linear Trim” can be used to cover any unwanted exposed wall lining and/or act as a slimline fascia.

Ensure the edge of the wall lining is finished in a tidy manner. Leave at least 3mm between the trim and the wall lining (for a nice plasterboard edge finish we recommend Rondo stopping bead).

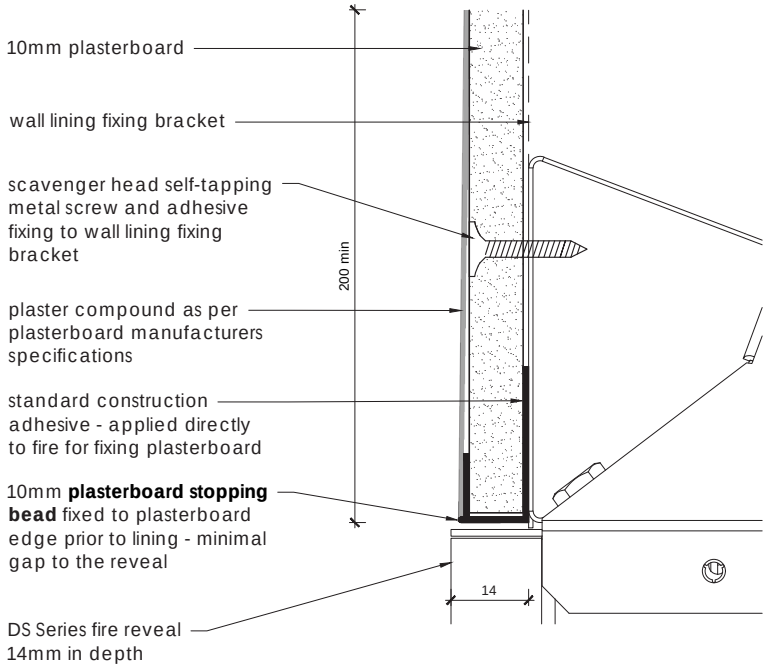

Note: a 20mm or less wall lining must be used when installing a KB Series fireplace without a fascia. For wall linings with a total thickness of 10mm or larger, a “Linear Trim” may be purchased to cover any exposed wall lining. A 10mm wall lining is recommended for ease of installation.

NOTE: Do not glue the fascia to wall cladding, do not fit cladding around the fascia that prevents it from being removed, do not run the fire without the fascia properly attached, the fascia is designed to be easily removed for future servicing.

Bevelled Lite Fascia

If using a Bevelled Lite fascia, cutouts will be required in the finished plaster board to allow for the fascia securing pins to attach to the appliance.

NOTE: Do not glue the fascia to wall cladding, do not fit cladding around the fascia that prevents it from being removed, do not run the fire without the fascia properly attached, the fascia is designed to be easily removed for future servicing.

NOTE: A 13mm wall lining must be used when installing a KB fireplace with a Bevelled Lite fascia; this is the maximum distance the Bevelled Lite fascia can sit off the front face of the fire.

NOTE: The orientation of the lower trim when being installed should ensure that the tabs of the trim are facing into the fire with the flat edge facing the front.

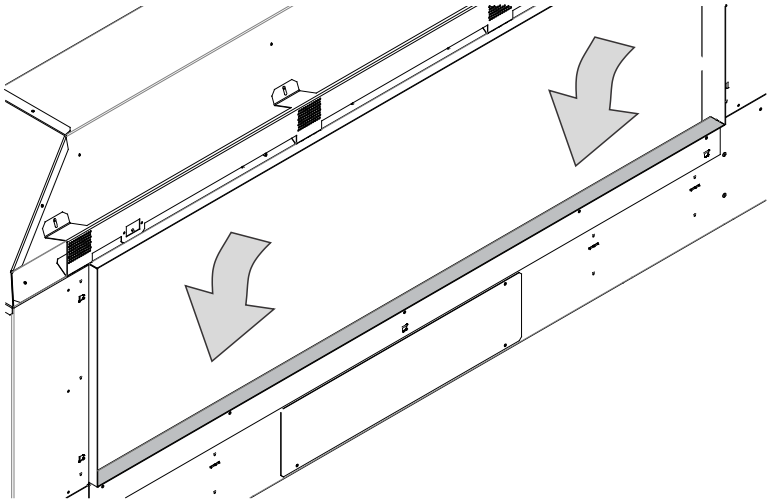

F10 Fitting the Linear Trim

To install the Linear Trim onto the KB Series, slide the bottom of the trim along the gib trim and push it in flush with the wall cladding. It should slide in on all four sides and fit by friction inside the black reveal (the top should be above the top of the black reveal).

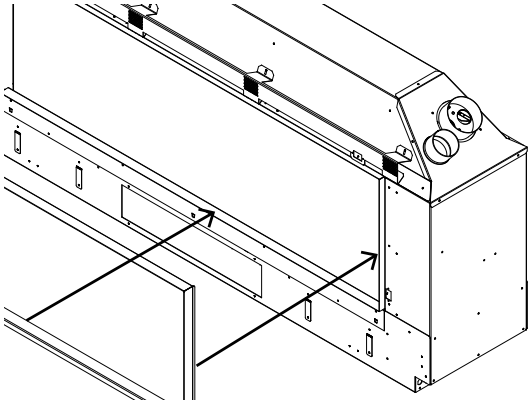

Note: If the friction fit is loose, please use the provided fiber tape along the bottom edge of the linear trim to tighten the fit.

F11 Fitting the Bevelled Lite Fascia

To avoid scratches to the fascia panels of this heater, they must be fitted at the conclusion of the installation process, after wall linings are in place.

See Instructions provided with the fascia kit for installation guide.

Note: Never rub the fascia.

F12 Locating Wall Mount Cradle for Wireless Control

The appliance's remote contains the thermostat that will sense the room temperature and communicate this back to the heater via Bluetooth.

A wall mount cradle has been provided for the wireless control and where possible the control should be housed in this cradle.

The location of this cradle should be decided by taking into account the following factors:

- Simple and convenient access for the user
- Away from air flow and drafts through the room
- The parts of the room that people are likely to spend time
- Away from direct sun light
- A suitable distance away from the heater
- Ideally 1.2 m to 1.5 m from the floor

The Bluetooth signal will go through some walls but for best results Escea suggest that the cradle position is less than 10 metres away from the heater and within the same room.

The best height off the ground to locate the cradle is about chest height. This gives a good average room temperature and easy access for the user.

Please ensure that the cradle is attached firmly onto the wall using the screws provided.

F13 Operating the Appliance

Charge the remote by plugging it into a USB-C cable.

To turn the fire on, press the ‘⏻’ button once; within a few seconds the appliance will begin its startup sequence.

NOTE: The appliance begins its startup with a 15 second pre-start purge, where the flue fan runs on its own to clear the firebox before it tries to ignite. During the pre-purge the remote will show “Starting”.

When the appliance has lit, set the desired room temperature by pressing the ‘+’ or ‘—’ buttons repeatedly until the display is showing the desired temperature.

Run the appliance on full for an hour with the windows and doors open in the dwelling. This will ensure any initial smells have the chance to dissipate.

The appliance is turned off by pressing the ‘⏻’ button once more. The remote will display “Standby”.

Run the appliance again and check the operation of the thermostat by increasing and decreasing the set temperature. Check that the Effect Only and Fan Boost functions work correctly.

For further operation instructions please refer to the User Guide.

F14 Normal Operating Sounds and Smells

NOTE: Each time the fire is lit from cold the glass may fog up with condensation. This is normal and the condensation will disappear within a few minutes once the glass heats up.

Sounds:

It is possible that you will hear some sounds from your gas appliance. This is perfectly normal due to the fact that various types of materials are used within your appliance. Listed below are some examples. These are all normal operating sounds and should not be considered as defects in your appliance.

Fan:

Escea gas appliances use electric fans to push heated air into the room. It is not unusual for the fan to make a “whirring” sound when ON. This sound will increase or decrease in volume depending on the speed setting of your fan.

Gas Control Valve:

As the gas control valves turn ON and OFF, a dull clicking sound may be audible. This is the normal operation of a valve. When the fire is switched off after being run for a while, there may be popping and fluttering noises as the residual gas in the burners burns away. These are normal and are no cause for concern.

Unit Body/Firebox:

Different types and thicknesses of steel will expand and contract at different rates resulting in some “cracking” and “ticking” sounds being heard throughout the heating and cool down processes.

Smells:

The first few times the unit is operated, the unit may release an odour and the flames will appear orange due to: the curing of the paint, the burning off of the starch in the gas logs and the oils in the metal. This is a temporary curing process which will disappear with use.

A deposit on the inside of the glass, caused by the starch in the logs, may appear as a build up after several uses. If this film is not removed, it will bake on and may become difficult to remove. When the glass is cold, remove it (see section E3 on page 27) and clean the inside with a non-abrasive cleaner.

DO NOT ATTEMPT TO CLEAN THE GLASS WHILE IT IS HOT.

UNDER NORMAL USE, NEVER OPERATE THE UNIT WITH THE GLASS REMOVED.

END OF SECTION F

- ◯ **By the end of this section, you should have:**
- ◯ **The remote control mounted on its cradle on a wall**
- ◯ **Operated the fire and verified that it lights reliably and safely**
- ◯ **Run the appliance on full for an hour with the doors & windows open**
- ◯ **Checked the operation of the thermostat, Flame Effect & Fan Boost functions**

G INSTALLATION CHECKLIST

Go through the following checklist to ensure you have installed the appliance correctly:

- ◯ **Correctly sized cavity to suit your fascia and flue configuration**
- ◯ **Correct clearances to combustibles**
- ◯ **An electrical isolating switch to the appliance, accessible after finished installation**
- ◯ **Correctly sized gas supply with a pressure test point, ensuring adequate supply with all other gas appliances in the dwelling running**
- ◯ **Gas type conversion process carried out if required**
- ◯ **A weather-tight installed horizontal or vertical powerflue terminal with clearance as specified by AS/NZ5601.1**
- ◯ **If chosen, reasonable access to the outside face of the horizontal powerflue wall terminal for maintenance purposes and flue attached to the rear of the horizontal powerflue wall terminal leading back to the appliance (or similar for vertical powerflue terminals)**
- ◯ **The electrical cable from the powerflue terminal attached correctly and run back to the appliance cavity in an electrically safe manner**
- ◯ **The appliance fixed to the cavity base**
- ◯ **The appliance plugged into a mains electricity supply**
- ◯ **All gas joints and pressure points leak tested with suitable leak detection solution and drop tests completed on gas pipework**
- ◯ **Fuel bed correctly installed**
- ◯ **Glass correctly fitted**
- ◯ **Operated the fire and verified that it lights reliably and safely**
- ◯ **Appliance functions checked, including thermostat operation, Effect Only, and Fan Boost**
- ◯ **Data label marked up with correct gas type and dated by installer if converted during installation**
- ◯ **Home-owner shown how to operate the appliance correctly**
- ◯ **Warranty card filled in with installer details and appliance serial number**
- ◯ **User Guide made available for end user**
- ◯ **Plumbing Industry Commission Compliance Certificate given to end user**

IMPORTANT:

THIS APPLIANCE MUST BE SERVICED EVERY 12 MONTHS.

ANY SERVICE OPERATION SHOULD BE CARRIED OUT ONLY BY A SUITABLY QUALIFIED AND TRAINED PERSON.

GAS AND ELECTRICITY SUPPLY MUST BE ISOLATED BEFORE ANY SERVICE OPERATION IS CARRIED OUT ON THIS APPLIANCE.

THIS MANUAL SHOULD BE LEFT WITH THE APPLIANCE.

ONLY USE ESCEA APPROVED SPARE PARTS.

ESCEA SPARE PARTS ARE AVAILABLE FROM AN ESCEA DISTRIBUTOR OR RETAILER

DO NOT MODIFY THIS APPLIANCE.

S1 Annual Service Procedure

- ◯ **Isolate power and gas supply to fire.**
- ◯ **Remove glass and clean inside of glass.**
- ◯ **Remove fuel bed and brush off any soot.**
- ◯ **Clean electrode and pilot hood of any carbon build up and ensure correct gaps between electrode and pilot hood**
- ◯ **Remove burners and blow compressed air through the burner ports.**
- ◯ **Remove jets and clean injector hole (with solvent if necessary).**
- ◯ **Vacuum any dust from the cavity that houses the fan and from the underside of the fire box around the valve and solenoids.**
- ◯ **Test all joints for gas tightness.**
- ◯ **Reassemble heater and check that operating pressure is correct.**
- ◯ **Check glass sealing tape and replace if necessary.**
- ◯ **Check to make sure that flue system is intact and not in any way blocked.**
- ◯ **Trial heater with several start/stop cycles, Fan Boost, Effect Only, and thermostat modes to ensure that all modes function correctly.**

The product data plate is located underneath the electronics tray. (See “S10 Removing the Control Trays” on page 63.)

S2 Error Codes

This gas fire has been designed to show error codes to help explain and identify any fault situation that occurs. These codes will appear on the top of the remote touchscreen in the form of a letter “E” with a number code beside it. Codes can normally be reset by turning the fireplace off then on again at the mains power wall switch.

The following table shows what each code means and possible ways to rectify the situation. In the case of persistent or repeated shutdown errors, action must be taken immediately to find and repair the fault.

Some codes are not applicable for this model or are for factory diagnostics. These have not been included in this table.

NOTE: An error code may not signify a fault/warranty issue; depending on the error code, it may signify that the remote batteries are low or the LPG cylinder is empty. Refer to the section below and contact Escea if needed.

Error Code	Suggested action
E1 Electronics Over Temp	Ensure correct gaps are present around glass. Check fascia and trims are correctly fitted. Room air fans may be slowed or stalled. Check that the fans are plugged in, clean, and free turning. Check for excess lint and dust build-up on the PCB/Controller.
E2.1 The fire has tried to light three times and failed during a normal startup.	Check correct gas pressure to the appliance with all other appliances running. Check the spark electrode is sparking at the end of each 30s purge. Check the electrode is well enveloped in flame. Ensure no small embers/ coals have dropped onto the ignition electrodes inside the pilot guard. Ensure the electrode is not contacting any metalwork.
E2.2 Waited too long for purge to finish.	The fire has completed its purge but has not attempted to ignite the pilot.
E2.3 Three failures during normal runtime.	Check gas supply and check other gas appliances to see if they are affected. If you have two separate LPG cylinders, switch over to the full bottle or contact your gas supplier. You may need to retry igniting the fire a few times after re-establishing gas supply.
E2.5 Pilot has extingushed when the fire is in overtemperature mode.	The fire has moved to overtemperature mode (pilot flame only) and the pilot has extingushed. Check pilot jet for obstuctions.

E2.6 Pilot ignited then extingished when main burners lit.	Check gas supply and check other gas appliances to see if they are affected. If you have two separate LPG cylinders, switch over to the full bottle or contact your gas supplier. You may need to retry igniting the fire a few times after re-establishing gas supply. Check regulator and burner pressure.
E2.7 Critically low supply voltage. (<185V)	Check supply voltage.
E3.1 TCO 1 (Heat exchanger) has gone over temperature.	Check that fans are plugged in, cleaned, and free turning - room air fans may be slowed or stalled. Check the burner pressure -being set too high may result in excess heat build-up. Check the gas jets are correct.
E3.2 TCO 2 (Lower chassis) has gone over temperature.	Check that fans are plugged in, cleaned, and free turning. Check fan capacitors are plugged in - secondary room air fan may be slowed or stalled.
E3.3 TCO over current protection activated.	Check that TCO wiring terminals are properly connected and not touching the chassis or firebox.
E4.1 Primary valve solenoid current abnormal.	Check that the connections to each solenoid are secure and in place. The primary solenoid on the valve inside the fire may have failed. If this is the case, the coil will need to be replaced.
E4.2 Secondary valve solenoid drawing current when supposed to be off.	Contact Escea technical support.

E4.3 Secondary valve solenoid overcurrent protection activated.	The valve solenoids have failed the pre-ignition test. A wire may have dislodged or the valve solenoid is faulty. Check that the connections to each solenoid are secure and in place. The connections on the ends of the wires may need to be tightened (e.g. with a pair of pliers) to ensure a robust connection to the valve terminal. Check the wiring to the soleniods for damage.
E4.4 Secondary valve solenoid drawing too much current.	
E4.5 Secondary valve solenoid drawing too little current.	
E6.5 Room fan current too low.	Check that room fans and capacitors are plugged in.
E6.6 Room fan current too high.	Check that room fans are not stalled or jammed. Check wiring loom for damage.
E7.1 Pressure switch stuck closed at startup	Ensure the pressure switch is mounted vertically and the diaphragm is operational.
E7.2 Flue fan current too low.	Check powerflue cable is correctly plugged into the fire and powerflue. Check powerflue cable for damage.
E7.3 Flue fan current too high.	Check powerflue fan is free spinning and not stalled or jammed. Check powerflue cable for damage.
E7.4 Pressure switch does not close during purge.	Check whether the pressure switch is activating at startup (there is an orange indicator LED in the control tray and near the Aux button). Check that both flues are securely connected at both ends to the appliance and the Power Flue wall terminal and that the flue is not damaged. Check that the pressure switch electrical connection is correct. Check that the pressure switch hoses are connected at both ends. Ensure the hoses are not kinked. Ensure the pressure switch is mounted vertically and the diaphragm is operational. The black hose should be connected to the lighter pressure port and the translucent hose to the darker pressure port. Check that the fan inside the Power Flue wall terminal is running during startup. This fan may need servicing if it is slowed or stalled.

S3 Cleaning the Fuel bed and Glass

IMPORTANT: Always use gloves when handling the glass.

Follow “Removing (and Replacing) the Glass” on page 27 to remove the glass. Place the glass carefully aside. Note that any soot on the glass can mark carpet and furnishings. Any standard ammonia-free glass cleaner may be used to clean the glass. Use a soft brush to clean the fuel bed media, being careful to replace it according to the instructions in “Finishing the Installation” on page 36.

If soot build up on the fuelbed and/or the inside of the glass becomes excessive or regular then one of the following actions may be required:

- Reset the gas pressure - the pressure may be too high;
- Reposition the fuelbed - check with specific fuelbed instructions for details;
- Clear any blockage from primary aeration port of burner;
- Check that the flue tube is not damaged or disconnected;
- Check that the exhaust fan is operating and cowl is not blocked in any way.

S4 Service-Mode Login (Elevated Permissions)

To gain access to the service mode with additional functionality, please follow these steps using the Escea Smart Heat App. To obtain a service mode passkey, ensure you have your session ID ready and call Escea at: NZ : +64 3 478 8220 or Aus : 1-800 460 832

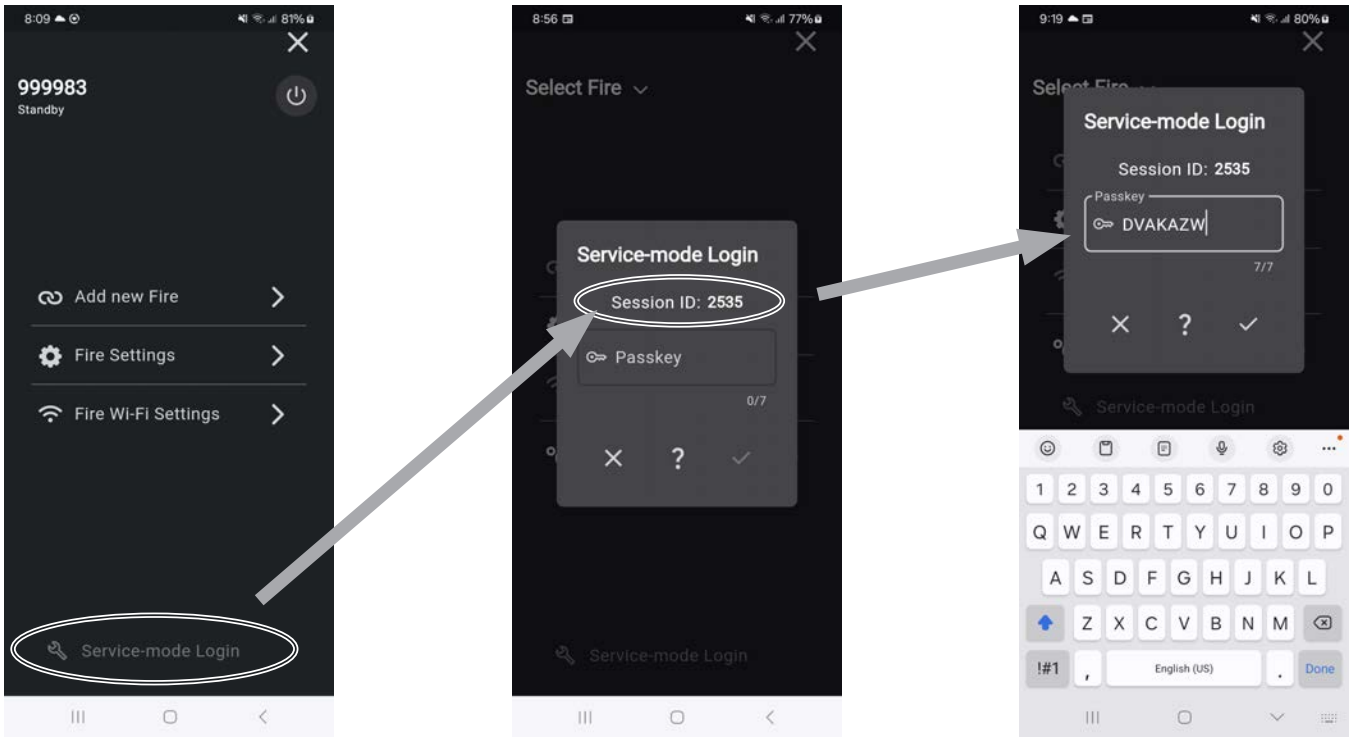

S5 Checking Operating Pressure

See section “E5 Checking the Gas Operating Pressure” on page 28.

S6 Replacing/Pairing a Remote Control

If the wireless control becomes lost or damaged, a new one can be ordered from any Escea retail agent.

1. Hold down the black (AUX) button on your fire for a minimum of 20 seconds, this will tell your fire to forget any paired remotes.
2. Ensure the fire and remote are set to 'Off'. Gently shake the remote to wake it up if necessary.
3. Press the menu button on the touchscreen

- Go into Settings
- Advanced
- More
- Pair Fire

4. Select the fire you wish to pair to and select "Next".
5. Enter the fire's PIN. Tap each digit then use the up and down arrows to change the digit.
6. Press "Pair". The fire is now linked to the remote control.

Note: Do not attempt to use the old remote once the new one is paired.

S7 Replacing the Burners

See section "E4 Removing (and Replacing) the Infill & Burners" on page 28.

S8 Serial Number

The serial number for the fire can be found in three places. The first is through the remote; tap the menu button and select "Information". The second is on the data stickers on the chassis under the electronics tray, and on the electronics tray. (See "S10 Removing the Control Trays" on page 63)

S9 Removing or Cleaning the Fan(s)

As part of regular service procedure, it is recommended that the fan is removed for cleaning. Dust will build up on the fan rotor and in the cavity where the fan is located. This can be removed by the service person using a hearth brush and a vacuum cleaner.

WARNING!

TURN THE GAS AND POWER SUPPLIES OFF.

Remove the trims, glass, infill, and burners following sections "Removing (and Replacing) the Glass" on page 27 & "Removing (and Replacing) the Infill & Burners" on page 28.

Remove the six screws holding the fan assembly in place and lift out using the handles.

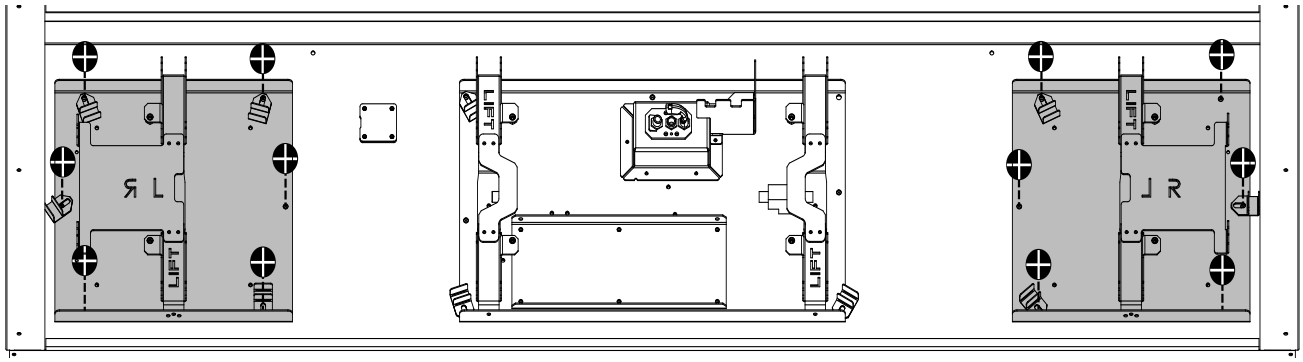

S10 Removing the Control Trays

Start by following the instructions in “S9 Removing or Cleaning the Fan(s)” on page 62 in order to access the control trays.

NOTE: It is not necessary to remove the fans to access the control trays.

WARNING!

TURN THE GAS AND POWER SUPPLIES OFF.

Remove the 8 screws on the gas tray (shown shaded in the diagram below).

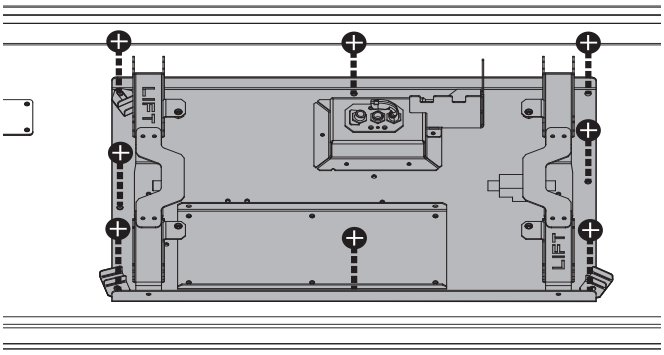

Remove the gas tray by lifting up and to the right. This is still connected internally to the gas hose and power cables. Disconnect the 4 pin connector between the electronics tray and the gas valve, as well as the blue/white and brown leads from the black solenoid on top of the modulator valve (shown below).

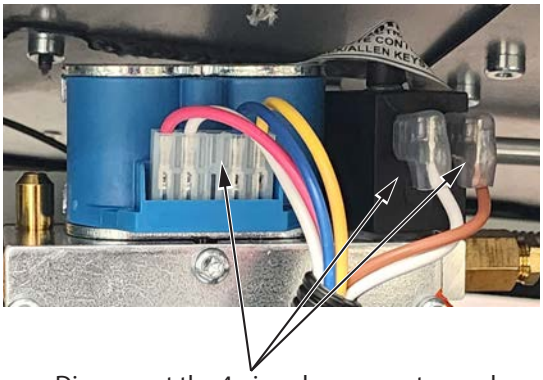

Disconnect the 4 pin valve connector, and the blue/white and brown leads from the

To remove the electronics tray, unscrew the one black screw shown and disconnect the white wire connector. Lift the end of the tray where the screw was just removed and slide it out towards you.

S11 Pressure Switch Removal

1. Follow the steps in section “E3 Removing (and Replacing) the Glass” on page 27 to remove the glass from the front of the appliance. Follow the steps in section “E4 Removing (and Replacing) the Infill & Burners” on page 28 to remove the burners and infill.
2. Lift the side glass and its surround up and tilt forward to remove from the retaining hooks. Hold these carefully so the glass doesnt fall out.
3. Remove the 10 screws (shown in the diagram below) in the access hatch and carefully remove from the firebox.

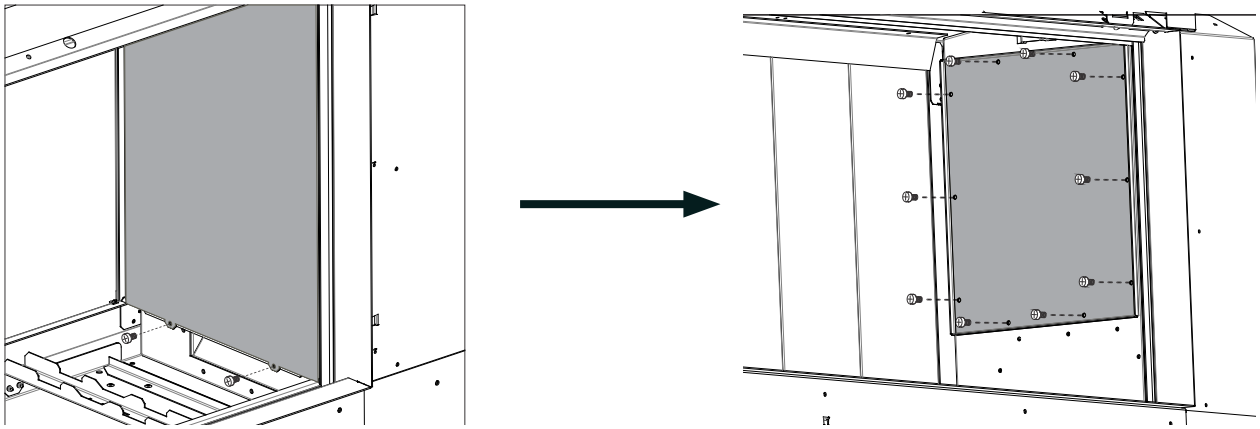

4. Remove the 2 silicone tubes. Disconnect the two wires from the pressure switch and remove the two screws on either side of the pressure switch to remove it from the bracket.

When reconnecting the pressure switch, be sure to connect the tubes as shown in the diagram below. The black tube should be connected between the grey side of the pressure switch and the low pressure port. The translucent tube should be connected between the black side of the pressure switch and the high pressure port.

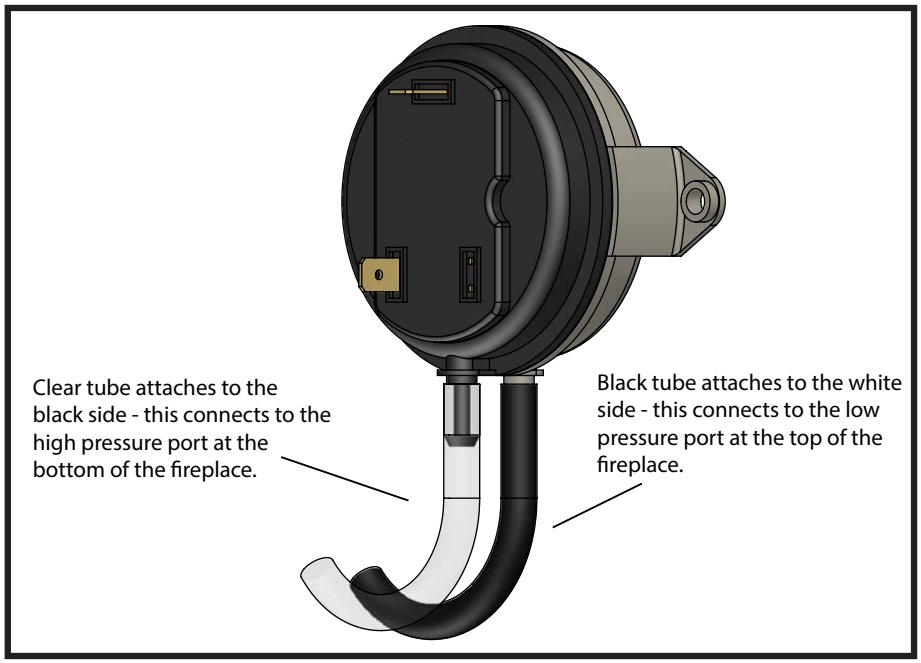

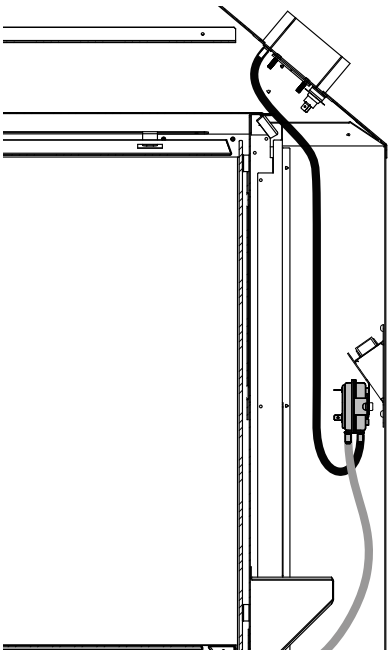

S12 Replacing the Thermal Cut Out

WARNING!

ENSURE POWER IS TURNED OFF BEFORE REMOVING ANY TCO.

There are two thermal cutouts: one in the LH room fan assembly (60°C) and the other attached to the exhaust manifold (90°C or 120°C).

Exhaust TCO (90°C for LH-RH Corner, 120°C for Peninsula)

Access to this TCO can be made by following steps 1 to 2 from section “S11 Pressure Switch Removal” on page 63. Remove the 10 screws (shown in the diagram below) in the access hatch and carefully remove from the firebox.

Reach in to the hatch and locate the TCO (circled in the diagram below). The TCO has two wires connected to the main body; remove these. Unscrew the TCO using your hand and remove from the firebox.

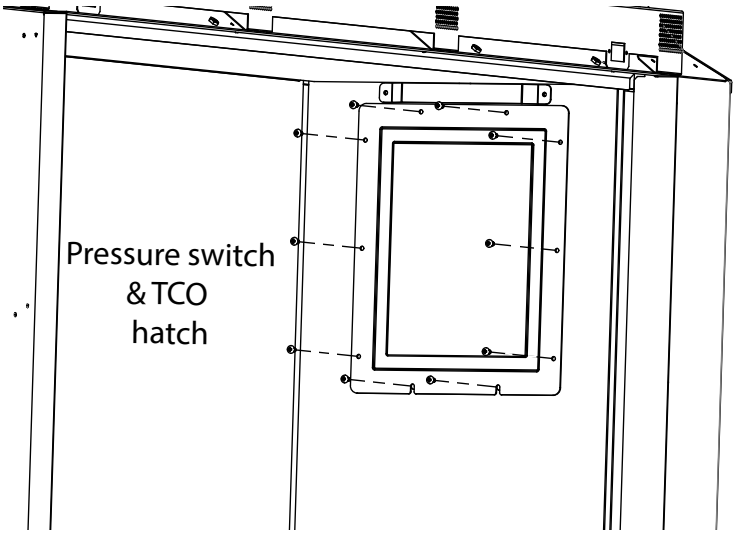

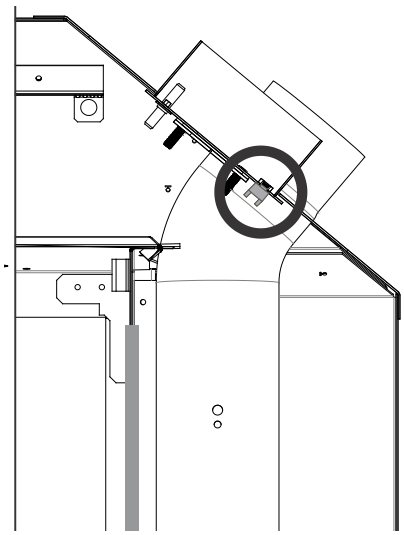

Fan TCO (60°C)

Access to this TCO can be made by following the steps in section “S9 Removing or Cleaning the Fan(s)” on page 62 and removing the left hand fan (not exhaust side). Once the fan is removed you will see the TCO (circled in the diagram below). To remove this, unscrew the two visible screws and once free remove the two wires connected to the TCO and remove from chassis.

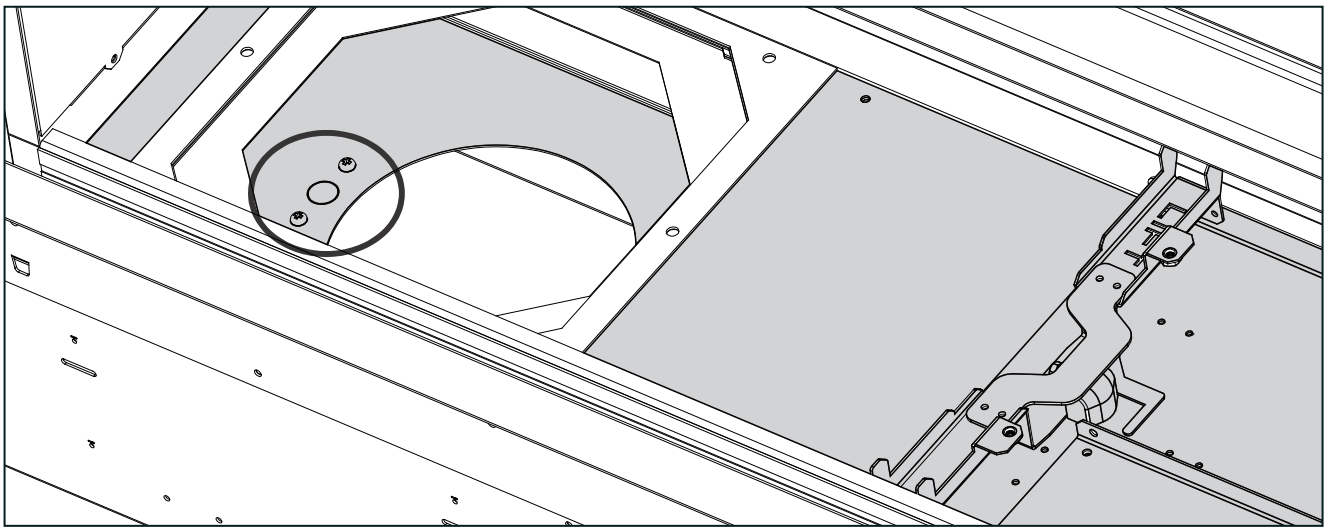

S13 Single Sided Front to Back Conversion (only for single sided fires)

1. Follow sections E3 on page 27 and E4 on page 28 to remove the glass, infill, burners.
2. On the inside of the firebox, loosen the firebox glass liner bracket by lossening - not removing - the screws (circled in the diagram below, quantity may differ with model).

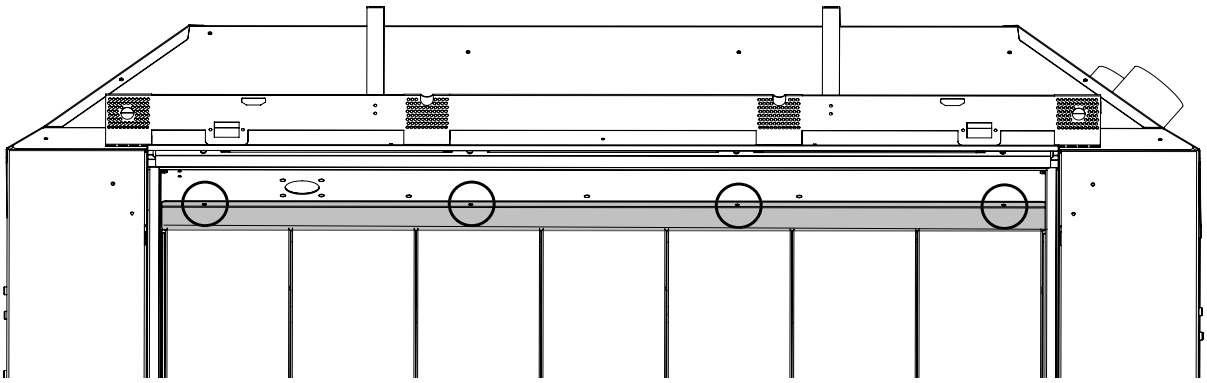

3. Carefully grab and lift out each glass liner by swinging the bottom of the glass up and out towards you (shaded in the diagram below). Remove the firebox glass liner bracket completely and replace the screws into the firebox ceiling.

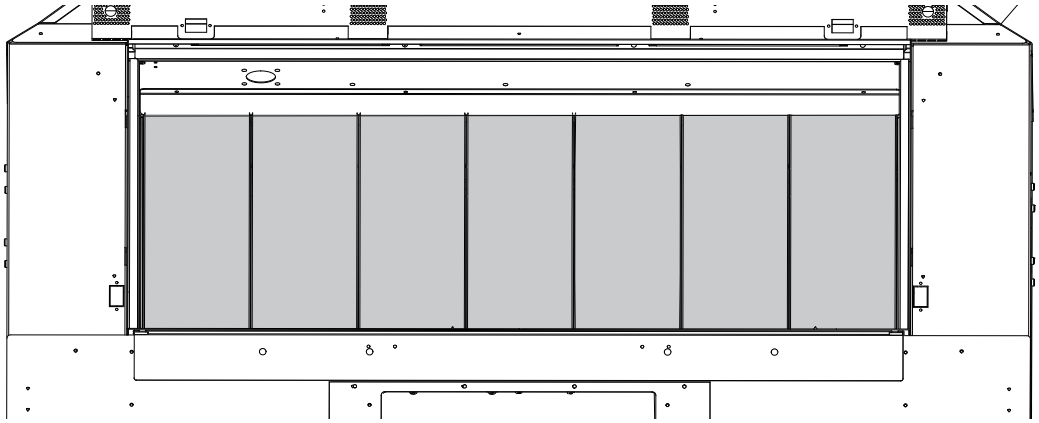

4. Remove the screws circled below, these hold the firebox back panel to the firebox.

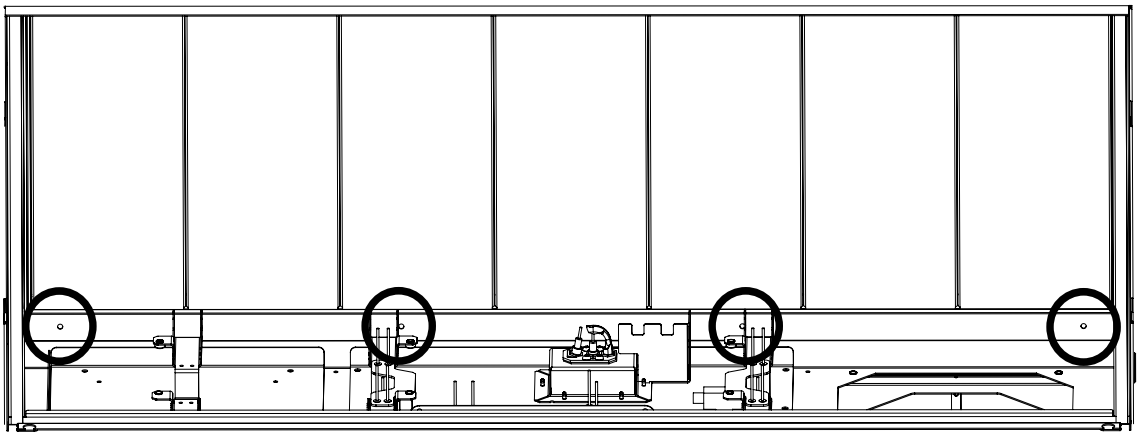

5. Move to the back of the fire for the following steps. Remove the screws (circled in the diagram below) in the chassis back panel of the appliance. Remove the chassis back panel.

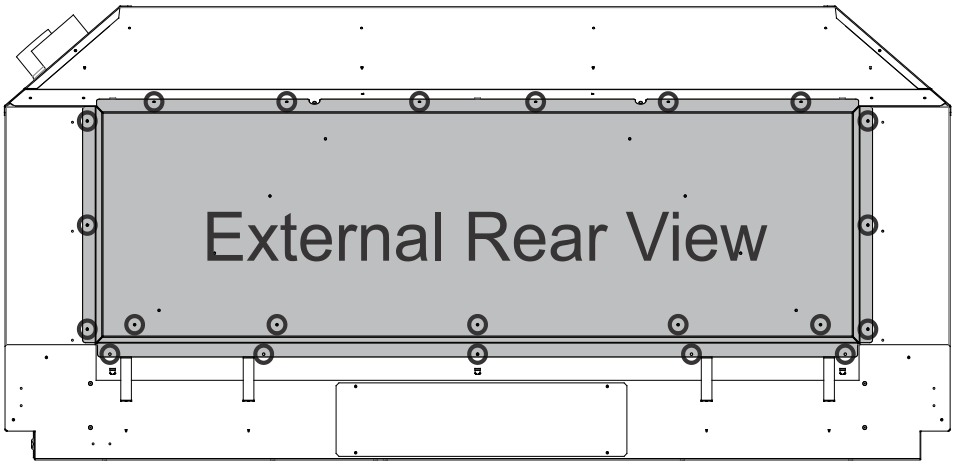

6. Now remove the top bracket by undoing the 1/4 turn fasteners (circled below) and allow the firebox back panel to lean forward so you may lift the panel out.

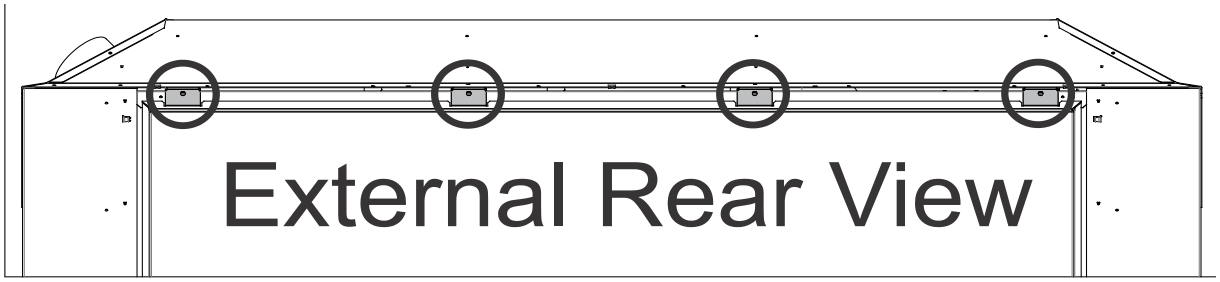

7. Relocate the diagnostic bracket to the opposite side of the appliance by carefully removing the middle screw and feeding it through to the opposite side of the fire (as shown in the diagram below).

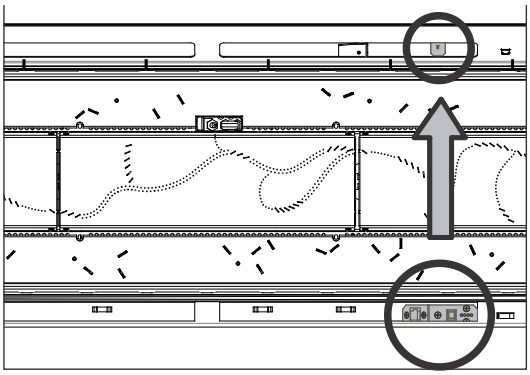

8. Remove the bottom trim (shown below) by pulling to release it from the appliance, taking care not to scratch the side trims.

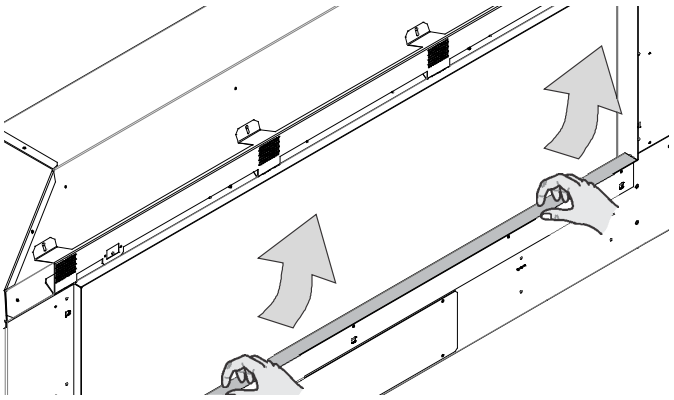

9. Remove the two side trims. These are fixed top and bottom with the magnets.

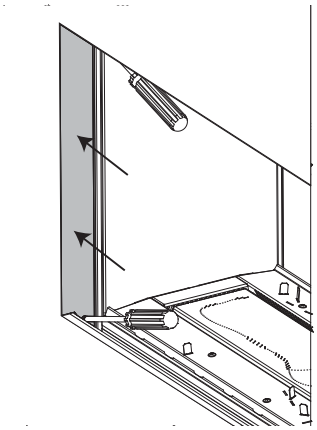

10. Remove the top trim bracket from the front by unscrewing the black machine screws provided (circled below).

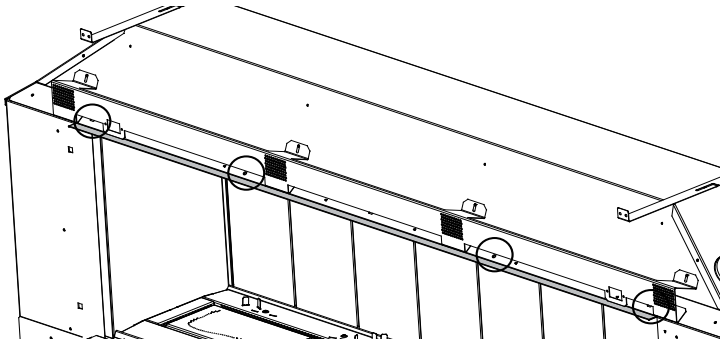

11. Remove the two fan assemblies from the fire by following the instructions in “S9 Removing or Cleaning the Fan(s)” on page 62.

To ensure the fire functions properly, the air ramps need to change position. All four of the ramps are the same part just in different positions. We will change the front ramps first and then the rear.

NOTE: There is tension in the ramps which may make them tight to change positions.

12. To change the front ramps remove the top and bottom screws (shown in the picture below), lift up the ramp untill the bottom flange can be slid into the slot in the fan box, now use the removed screws to fix down the ramp.

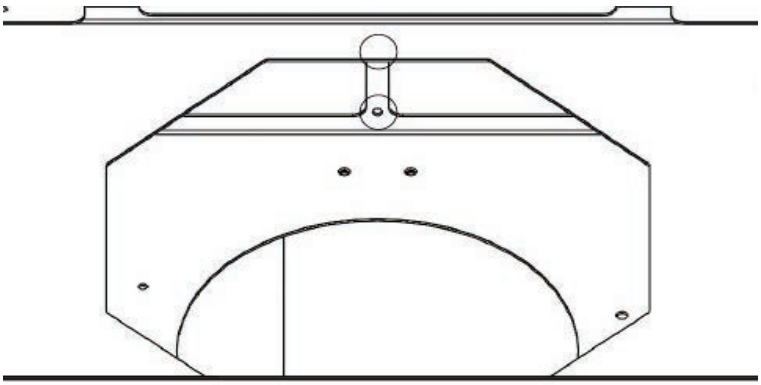

13. To change the rear ramps remove the two screws fixing the ramp down to the fan box and then slide the flange out and flatten the ramp against the fan box installing the removed screws in the top and bottom to hold it in place.

14. Reinstall the fan assemblies into the fire.

15. Reinstall the firebox back panel, removed in step 6, onto what was the front and is now the back, making sure to install the screws removed in step 4

16. Reinstall the chassis back panel and the internal glass liners, also on the opposite side to which they came out from. Remove the screws from the firebox ceiling to attach the liner bracket.

17. After reinstalling the components in the previous steps, reinstall the side and top trims, leaving the bottom trim for the last step.
18. Reinstall the burners and the infill by reversing the steps in “E4 Removing (and Replacing) the Infill & Burners” on page 28.
19. Install the fuel bed media as per section “E4 Removing (and Replacing) the Infill & Burners” on page 28. Finish the conversion by installing the glass and bottom trim brackets.

Note: After any conversion AIRFLOW MUST NEVER be coming up the glass from the bottom, it must ALWAYS EXIT FROM the top of the glass. If this is not correct then review the position of the tabs on the back of the fire at the bottom. Single Sided Front to Back Conversion (only for single sided fires)

Note: After any conversion AIRFLOW MUST NEVER be coming up the glass from the bottom, it must ALWAYS EXIT FROM the top of the glass. If this is not correct then review the position of the tabs on the back of the fire at the bottom.

S14 Servicing the Horizontal / Vertical Powerflue

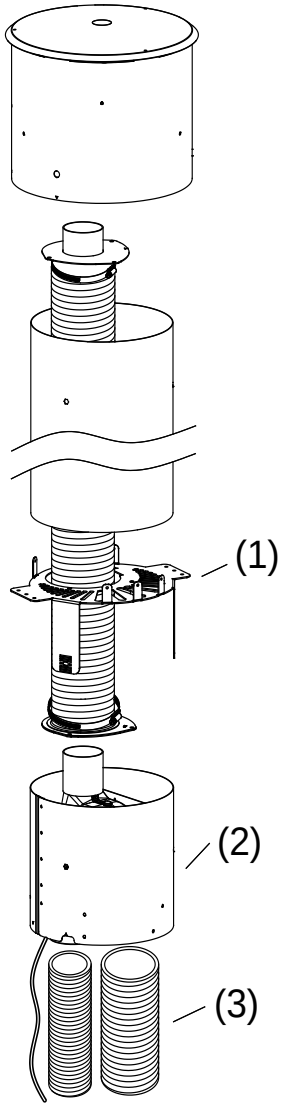

Ensure the power to the powerflue is off by disconnecting the power to the appliance inside. If the appliance has been running, allow the powerflue to cool before attempting to service it.

Servicing a Horizontal Powerflue:

Undo the screws on the outside of the powerflue box and separate the two parts, giving you access to the fan inside.

Removing this plate gives complete access to the fan for servicing or replacement. Check that all the seals are still intact. Check that the fan electrical terminals, motor, and impeller are not corroded. Ensure there are no signs of leakage in or around the terminal.

When reassembling the powerflue, line up the round silicon grommets with the outlet tube of the fan and push the cowl back into place. Ensure all seals are still in place and replace all of the screws to hold the cowl in the correct position.

Servicing a Universal Vertical Powerflue:

If the UVP is internally installed remove the unit and replace the complete fan unit.

If the UVP is externally installed the cowl/fan unit is to be completely replaced by removing it from the liner or flashing.

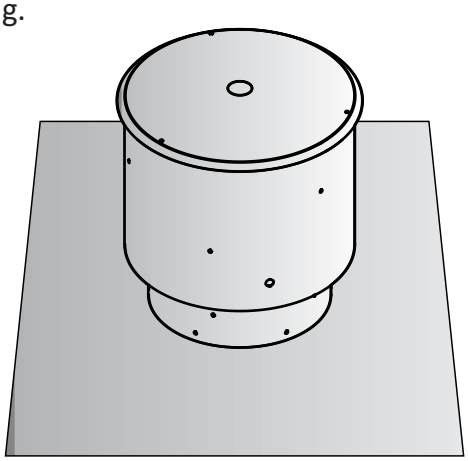
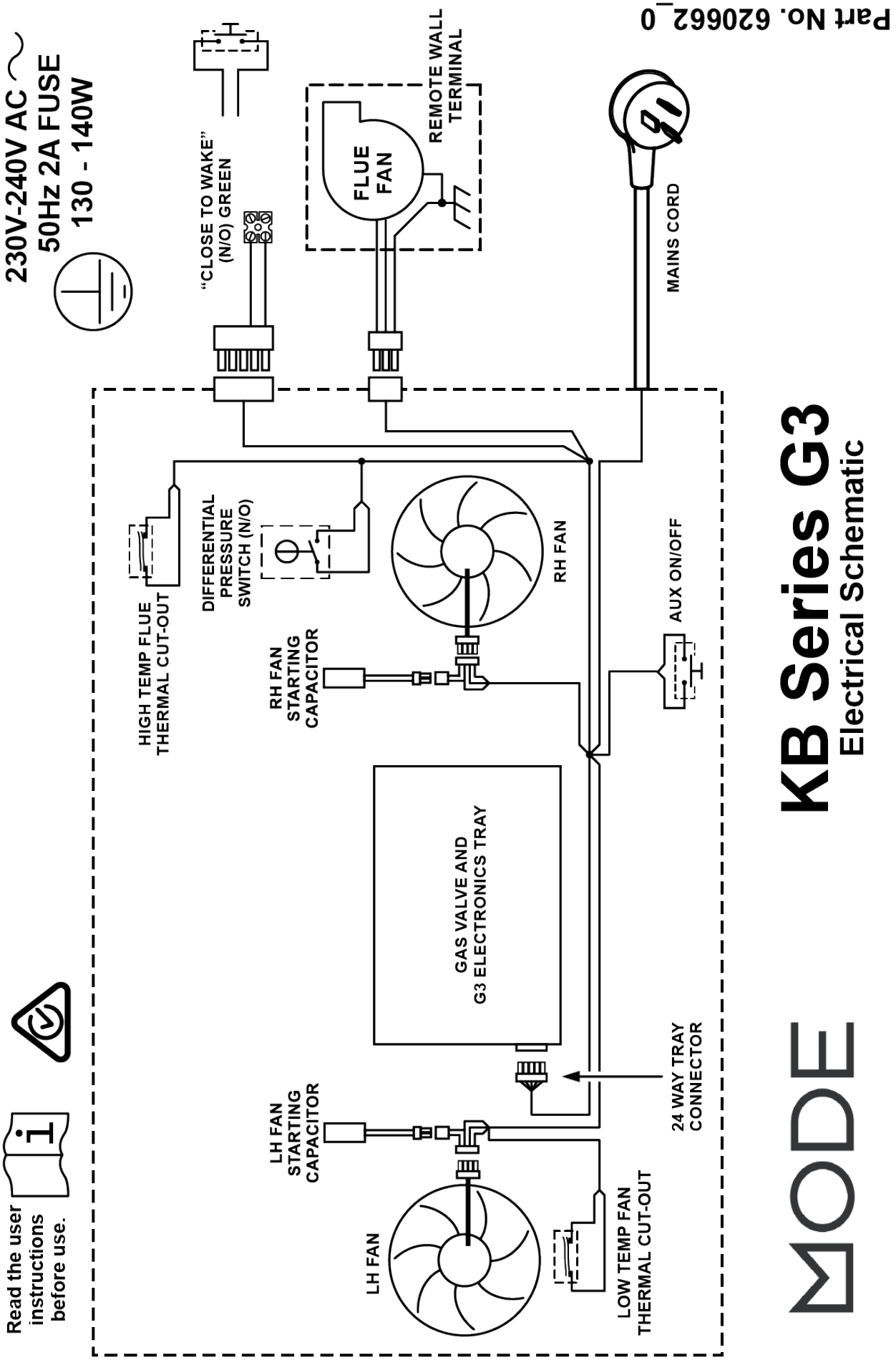
S15 Wiring Diagrams