630829_4

TFS Series MK2

FREESTANDING WOOD FIREPLACE

Installation Manual

NEW ZEALAND

FIRE BY escea.

IMPORTANT SAFETY INSTRUCTIONS

THE PRODUCT DATA LABEL CONTAINING TECHNICAL SPECIFICATIONS FOR THIS FIREPLACE IS CHAINED TO THE FRONT RIGHT OF THE FIREPLACE.

WARNING: THIS FIREPLACE AND ITS FLUE SYSTEM MUST BE FULLY AND CORRECTLY INSTALLED IN ACCORDANCE WITH THE MANUFACTURER'S WRITTEN INSTRUCTIONS, AS/NZS 2918, AND ALL APPLICABLE NATIONAL AND LOCAL BUILDING CODES. ESCEA RECOMMENDS INSTALLATION BY A REGISTERED AHHA OR NZHHA INSTALLER.

WARNING: FIREPLACES INSTALLED IN ACCORDANCE WITH AS/NZS 2918 SHOULD CONFORM TO THE REQUIREMENTS OF AS/NZS 4012 AND AS/NZS 4013 WHERE REQUIRED BY THE REGULATORY AUTHORITY. THE FIREPLACE SHOULD BE IDENTIFIABLE BY A CONFORMANCE PLATE WITH THE MARKING "TESTED TO AS/NZS 4012 AND AS/NZS 4013".

WARNING: DO NOT MODIFY THIS FIREPLACE IN ANY WAY NOT APPROVED IN WRITING BY THE RELEVANT TESTING AUTHORITY. UNAUTHORISED MODIFICATION WILL BE CONSIDERED A BREACH OF COMPLIANCE WITH AS/NZS 4012:2014 AND AS/NZS 4013:2014.

WARNING: THIS FIREPLACE IS DESIGNED TO BURN DRY, SEASONED SOFTWOOD WITH A MOISTURE CONTENT BELOW 20%. DO NOT BURN TREATED, LAMINATED, PAINTED OR OIL-CONTAMINATED WOOD, AND NEVER USE ACCELERANTS SUCH AS PETROL OR LIGHTER FLUID. FIRE-LIGHTERS AND PAPER ARE ACCEPTABLE.

WARNING: KEEP ALL FLAMMABLE MATERIALS, INCLUDING LIQUIDS, CLOTHING, FURNITURE, AND FUEL STORAGE, AT A SAFE DISTANCE FROM THE FIREPLACE AT ALL TIMES. FUEL STORAGE SHALL NOT BE WITHIN THE FIREPLACE INSTALLATION CLEARANCES.

WARNING: OPEN THE DAMPER AIR CONTROL PRIOR TO OPENING DOOR FOR REFUELLING.

CAUTION: DO NOT MIX FIREPLACE OR FLUE SYSTEM COMPONENTS FROM DIFFERENT SOURCES. DO NOT MODIFY THE DIMENSIONAL SPECIFICATIONS OF ANY COMPONENT. SUCH ACTIONS MAY CREATE HAZARDOUS CONDITIONS. WHERE ANY VARIATION IS BEING CONSIDERED, CONTACT ESCEA BEFORE PROCEEDING.

CAUTION: THIS FIREPLACE MUST BE OPERATED WITH THE DOOR CLOSED AT ALL TIMES DURING USE. ONLY OPEN THE DOOR FOR REFUELLING, MINIMISING THE TIME THE DOOR REMAINS OPEN. DO NOT LEAVE THE DOOR OPEN DURING THE LIGHT-UP PHASE.

CAUTION: DO NOT OVERLOAD THE FIREBOX. FUEL LOAD MUST NOT EXCEED 50% OF THE FIREBOX CAPACITY. EXCEEDING THIS LIMIT MAY RESULT IN PROPERTY DAMAGE OR PERSONAL INJURY.

CAUTION: DO NOT OPERATE THE FIREPLACE WITH CRACKED OR BROKEN COMPONENTS, OR IF THERE IS A PERSISTENT SMELL OF FUMES. EITHER CONDITION MAY PRESENT A SERIOUS HEALTH OR SAFETY HAZARD, WHICH WILL RENDER THE INSTALLATION UNSAFE.

CAUTION: THIS FIREPLACE MUST BE MAINTAINED AND OPERATED AT ALL TIMES IN ACCORDANCE WITH THESE INSTRUCTIONS.

CAUTION: NEVER CLEAN THE FIREPLACE OR REMOVE ASH WHILE THE FIREPLACE IS HOT. DISPOSE OF ASH ONLY INTO A NON-COMBUSTIBLE, LIDDED CONTAINER. A RESIDUAL ASH LAYER OF APPROXIMATELY 25 MM SHOULD BE MAINTAINED IN THE BASE OF THE FIREBOX DURING NORMAL USE.

EXTREME CAUTION IS REQUIRED WHEN THIS FIREPLACE IS USED IN THE PRESENCE OF CHILDREN, OR PERSONS WITH REDUCED PHYSICAL, SENSORY, OR MENTAL CAPABILITIES. SUCH PERSONS MUST NOT USE THE FIREPLACE WITHOUT APPROPRIATE SUPERVISION OR INSTRUCTION FROM A RESPONSIBLE ADULT.

YOUNG CHILDREN MUST BE SUPERVISED AT ALL TIMES TO ENSURE THEY DO NOT TOUCH HOT SURFACES OR INTERACT WITH THE FIREPLACE UNSUPERVISED. CHILDREN MUST NOT CARRY OUT CLEANING OR MAINTENANCE. A PHYSICAL BARRIER IS RECOMMENDED WHERE UNSUPERVISED ACCESS BY CHILDREN OR VULNERABLE INDIVIDUALS CANNOT BE PREVENTED.

NEVER LEAVE THE FIREPLACE OPERATING AND UNATTENDED WHEN CHILDREN OR VULNERABLE PERSONS ARE PRESENT.

KEEP THESE INSTRUCTIONS FOR FUTURE REFERENCE

TFS SERIES MK2 PRODUCT SPECIFICATIONS			
Model Names	**TFS650 MK2**	**TFS850**	**TFS1000 MK2**
Description of Appliance	Freestanding Solid Fuel Fireplace		
ECAN Authorisation No.	260578	262236	253737
CM 1.6 Authorisation No.	260579	262237	*N/A*
Emissions - NES	0.65 g/kg	0.66 g/kg	0.79 g/kg
Efficiency - NES	66.1%	66.3%	65.7%
Efficiency Factor - CM 1.6	30.8 Mg/MJ	33.4 Mg/MJ	*N/A*
Tested Fuel Type	Softwood		
Max. Heat Output	12.5 kW	16.3 kW	19 kW
Ave. Heat Output	9.7 kW	12.8 kW	13.5 kW
Fireplace Compliance	Tested to *AS/NZS 2918:2018 Appendix B*		
Width	650mm	818mm	998mm
Height	632mm	632mm	632mm
Depth	526mm	526mm	526mm
Weight	160 kg	190 kg	215 kg
Door Size	605w x 483h	765w x 483h	945w x 483h
Firebox Volume	54.1L	76.3L	102.8L
Damper Control	Top Right - Above Door		
Wet-back	No		
Flue Type	Natural Draught - Direct Vent		
Flue Size	150mm Exhaust/200mm Intake/250mm Outer		
Min. Flue Length	4.6m from Floor Protector		
Flue Heat Shield	Not Required		
Flue Compliance	Tested to *AS/NZS 2918:2018 Appendix F*		
Flue Restraint (above roof)	Fix compatible stays at max. 3m intervals allowing for thermal expansion.		
Fireplace Serial Number Location	Data Plate affixed to the TFS Fireplace back panel		

Contents

A GENERAL INFORMATION 6

A1. Limitations 6
A2. Compliance 6
A3. Installer Responsibility 6
A4. Damaged Fireplace 6
A5. Storage and Handling 6
A6. Warranty Information 6
A7. Installation Diagrams 7

B APPLIANCE OVERVIEW 8

B1. Scope 8
B2. Airtight Buildings 8
B3. Freestanding Fireplace Dimensions 8
B4. Clearances to Combustibles - Parallel 9
B5. Clearances to Combustibles - Corner 9
B6. Hearth Requirements 10
B7. Base Options 11
B8. Heat Shielding 12
B9. Ceiling Plates 12
B10. Specifying Flue Extensions 13
B11. Safety Clearances 13
B12. Flue Flashing 13
B13. Flue Cowl External Clearances 13
B14. Flue Detail 14
B15. External Wall Penetration- Double Skin 15
B16. External Wall Penetration- Triple Skin 15
B17. Flue Offsets or Bends 16
B18. Mid-Floor Detail 16
B19. Cavity Ventilation- Chimney Cap Vent 17
B20. Cavity Ventilation- Chimney Wall Vent 17

C INSTALLATION 18

C1. Hearth Installation 18
C2. Seismic Restraint 18
C3. Fireplace Restraint- Option 1 19
C4. Fireplace Restraint- Option 2 19
C5. Fireplace Installation 20
C6. Roof Penetration 20
C7. Roof Bracing Installation 21
C8. Ceiling Plate Installation 21
C9. Flue Installation- Step 1 22
C10. Flue Installation- Step 2 23
C11. Flue Installation- Step 3 24
C12. Flue Installation- Step 4 25
C13. Cowl Installation 26
C14. Flue Restraint 26
C15. Flashing Installation 27
C16. Roof Mounted Flue Stays 27
C17. Firebrick Installation 28
C18. Baffle Position Check 28

D CHECKLIST 29

E APPENDIX 30

E1.	Fireplace Components	30
E2.	Freestanding Insulated Flue Kit Components	30
E3.	Insulated Flue Extension Kit Components	30
E4.	Double Skin Flue extension Kit Components	30
E5.	Single Skin Flue extension Kit Components	30
E6.	45° Offset- Flue Cut Length	31
E7.	45° Offset- Minimum Offset Calculation	31
E8.	Designer Plinth Base Fixing	32

A GENERAL INFORMATION

A1. LIMITATIONS

This appliance is intended for indoor use only. Do not install outdoors or in the vicinity of swimming pools or wet areas.

Consult Escea Ltd before altering any dimensional or component specification.

A2. COMPLIANCE

This appliance must be installed according to these instructions and in compliance with all relevant National and State building regulations and *AS/NZS 2918 Solid Fuel Installations*.

A3. INSTALLER RESPONSIBILITY

Installation must be carried out by a licensed or trained installer who, on completion of the installation will issue a certificate of compliance. Installers must ensure the fireplace is installed according to manufacturer specifications, and local and national building codes. They are responsible for verifying structural suitability, maintaining required clearances, and ensuring safe and serviceable integration. Any deviation may affect performance, safety, or warranty coverage.

At the end of the installation, refer to **Sec. C19 Completion Checklist** to confirm all actions are complete. Any shortcomings in the appliance installation will be the responsibility of the installer, and Escea will not be accountable for any such failings or their consequences.

A4. DAMAGED FIREPLACE

Do not use if the fireplace has been dropped or has any other visible signs of damage.

Do not use this fireplace if any part has been under water, and immediately call a qualified technician to inspect the appliance, replacing any part that has been under water.

In the event of a natural disaster have a qualified technician inspect the fireplace for damage. Repair or replace any damaged components before operating this appliance.

A5. STORAGE AND HANDLING

- Check components for visible damage and verify parts supplied are correct for the installation. Photograph any damage and retain packaging until installation.
- Do not discard installation manuals or any included hardware.
- Do not stack other items on top of the fireplace or other components.
- Store in a dry, covered, and well-ventilated area. Keep away from moisture, dust, and corrosive materials.
- Use two or more people or lifting equipment and never lift by the fascia or glass.
- Wear protective gloves to avoid injury and protect finishes. Handle glass, bricks, and internal parts carefully to prevent damage.
- Don’t tilt, drop, or use sharp tools near visible surfaces.
- Keep the unit free from dust and debris prior to installation.

A6. WARRANTY INFORMATION

Escea warranties this WOOD fireplace in accordance with the Escea Warranty Terms and Conditions, which can be found on the Escea website: www.escea.com

Wood Fireplaces	Parts and Labour Warranty	Parts Only Warranty
Firebox	10 years	-
Fireplace Components and Parts	1 year	-
Fireplace Accessories	1 year	-

Parts & Labour Warranty – Escea will repair or replace defective parts and cover the installation of those parts.

Parts Only Warranty – Escea will supply repair or replacement parts at no cost. Installation is not included.

All warranty work must be pre-authorised by Escea or its distributors. Work carried out without approval will not be covered.

A warranty will be voided where defects, malfunctions or failures are caused by, but not limited to, incorrect installation, normal wear and tear, misuse, neglect, lack of proper and regular maintenance, accidental damage, any other alteration, or failure to follow operating instructions in the installation manual. To make a warranty claim, obtain your fireplace serial number, which can be found on the data plate affixed to the fireplace back panel. Please contact the retailer from whom the appliance was purchased from, or refer to the Escea Fireplace Warranty Terms and Conditions, which can be found on the Escea website: www.escea.com

Due to ongoing product development, Escea reserves the right to change any specifications listed in these instructions or warranty without notice. This WOOD fireplace is manufactured by:

Escea Ltd

17 Carnforth Street, Dunedin, 9018, New Zealand

0800 173 000

www.escea.com/nz

A7. INSTALLATION DIAGRAMS

Throughout this manual, symbols (key below) will be used to clarify and reiterate key steps in the process. All dimensions are in mm.

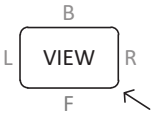

VIEW ORIENTATION - arrow shows the direction of view for the diagram in this step.

INSTALL STEP - this requires the addition or change to a new part for the installation.

WARNING - risk of electrical shock.

2 PERSON LIFT - this step involves heavy lifting.

RETAIN - a part is to be retained for future use, or is now required from a previous step.

DISCARD - a part will be discarded at the end of this step.

CORRECT STATE

SCREWDRIVER REQUIRED - this step involves the use of a Phillips or POZI head screws. *(No torque specification required)*

HEX SPANNER REQUIRED - this step involves the use of a hex head fastener or Tek Screw. *(No torque specification required)*

HEX KEY or HEX WRENCH REQUIRED - this step involves the use of a hex or allen key fixings. *(No torque specification required)*

RIVET GUN REQUIRED - this step involves the use of rivets for assembly and mechanical fastening.

INCORRECT STATE

B APPLIANCE OVERVIEW

B1. SCOPE

The Escea TFS Series MK2 are a series of freestanding wood fireplaces, constructed from 4mm painted mild steel panels with a 5mm glass door and utilises a direct vent co-axial flue system, negating the need for room air for combustion.

Any deviation, or aspect of the design or installation not covered within this document, should be first discussed with the Escea Architectural Advisory Team. Specifications not complying with these instructions may increase the risk of fire or property damage.

No TFS Series MK2 parts, consoles or assemblies are compatible with a MK1 variant of the TFS650 or TFS1000.

B2. AIRTIGHT BUILDINGS

The Escea TFS MK2 Freestanding Wood Fireplaces, when installed with the Escea Insulated Freestanding Flue Kit, are suitable for buildings where airtightness is to be achieved. The combination of a room-sealed firebox, insulated flue, and sealed ceiling plate prevents the movement of air through the fireplace and flue penetrations.

B3. FREESTANDING FIREPLACE DIMENSIONS

Model	Fireplace Dimensions
TFS650 MK2	650w x 632h x 526d
TFS850 MK2	818w x 632h x 526d
TFS1000 MK2	998w x 632h x 526d

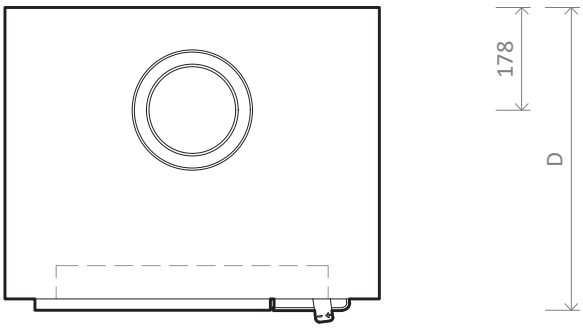

Top View

Side View

Front View

B4. CLEARANCES TO COMBUSTIBLES - PARALLEL

Clearances to combustibles are defined in accordance to *AS/NZS 2918 Appendix B*, with the TFS650 base height at 300mm (above floor level), and the TFS850 and TFS1000 at 375mm (above floor level).

Objects in front of the fireplace must maintain a 1.2m safety distance.

**Alcove walls are to be a maximum of 250mm in front of the fireplace.*

Model	A	B	C	D	E	F	G	H
TFS650 MK2	120	298	200	300	350	675	872	806
TFS850 MK2					350	759	1040	
TFS1000 MK2					360	859	1220	

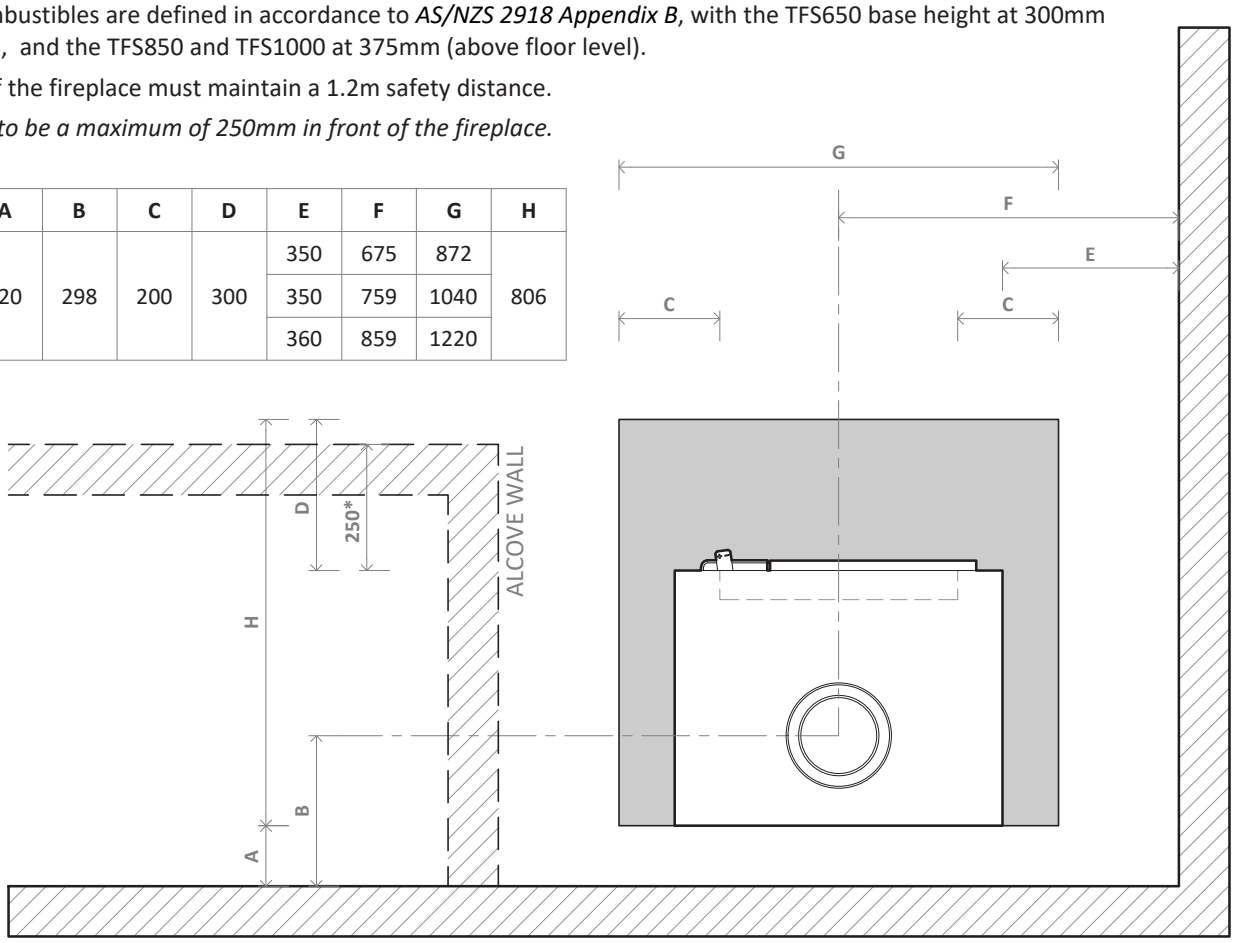

PLAN

B5. CLEARANCES TO COMBUSTIBLES - CORNER

Model	C	D	G	J	K	L	M	N
TFS650 MK2	200	300	872	100	456	150	328	806
TFS850 MK2			1040		515			
TFS1000 MK2			1220		580			

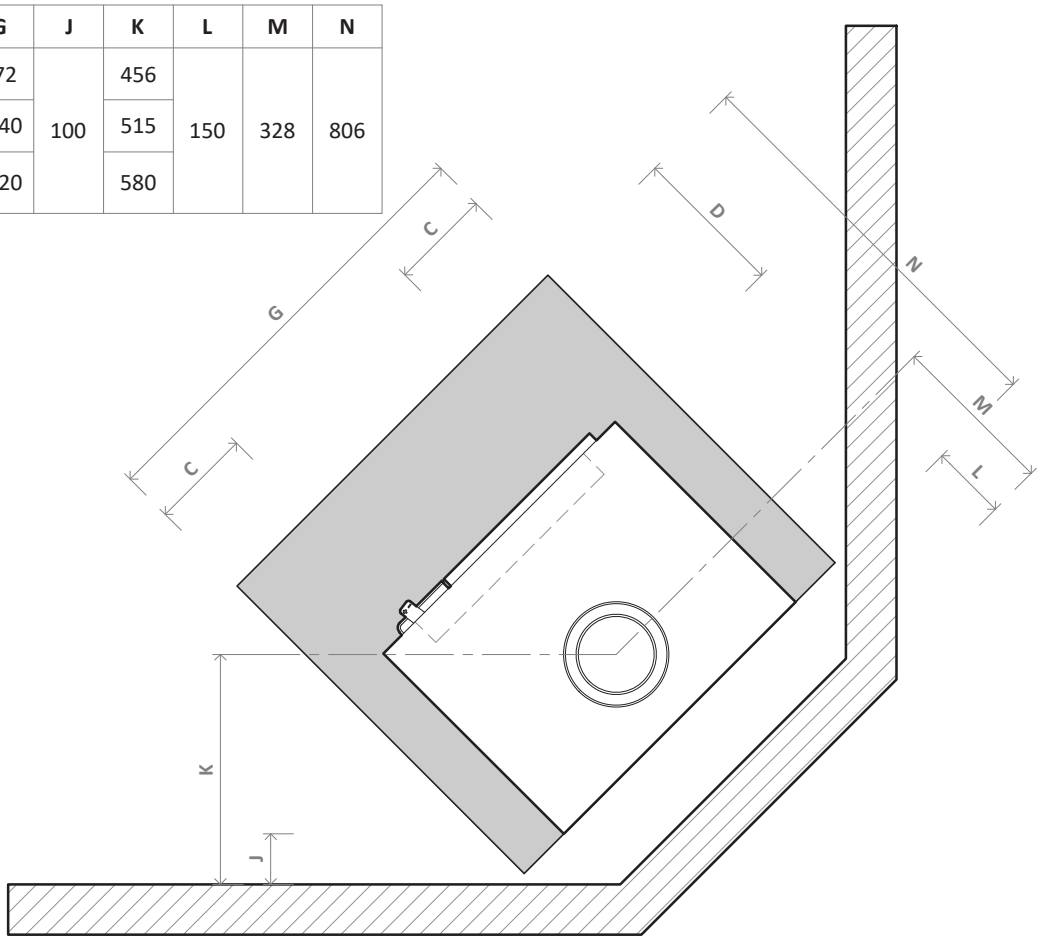

PLAN

B6. HEARTH REQUIREMENTS

A floor protector or insulated hearth is required under the TFS MK2 Freestanding Fireplace, and selection depends on installation height and base type. Alternative dimensions below apply to clearances in front of the appliance. Insulation board must be calcium silicate or calcium mineral based (e.g. Promatect or equivalent) with a thermal conductivity **less than 0.164 W/m²K**. Fibre cement boards are NOT acceptable.

Model	A	B	C	D
TFS650 MK2	300 min.	150 min.	470 min.	520 min.
TFS850 MK2	375 min.	150 min.	540 min.	560 min.
TFS1000 MK2	375 min.	150 min.	700 min.	810 min.

STANDARD INSTALLATION

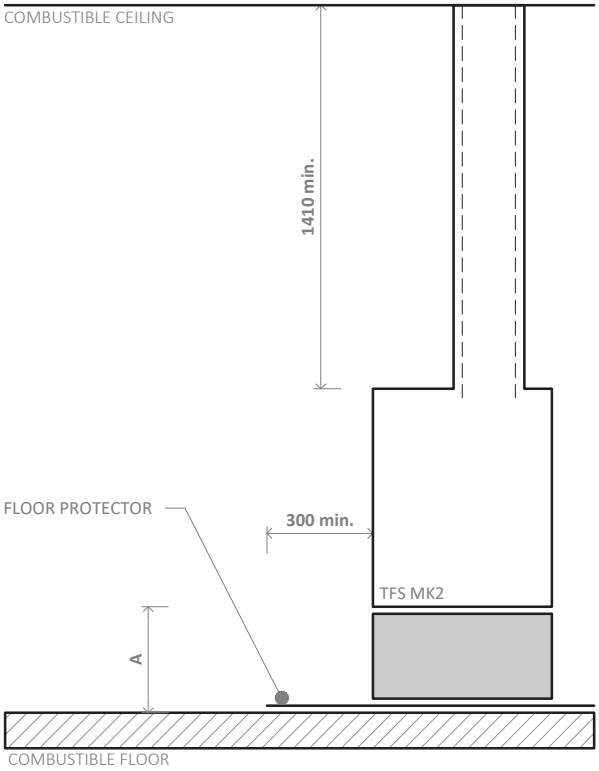

RAISED HEARTH INSTALLATION

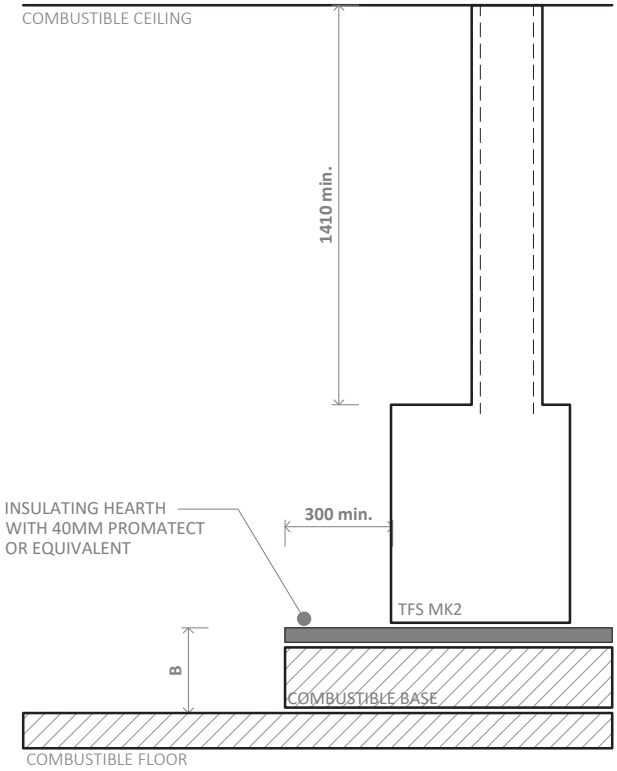

FLOOR INSTALLATION A

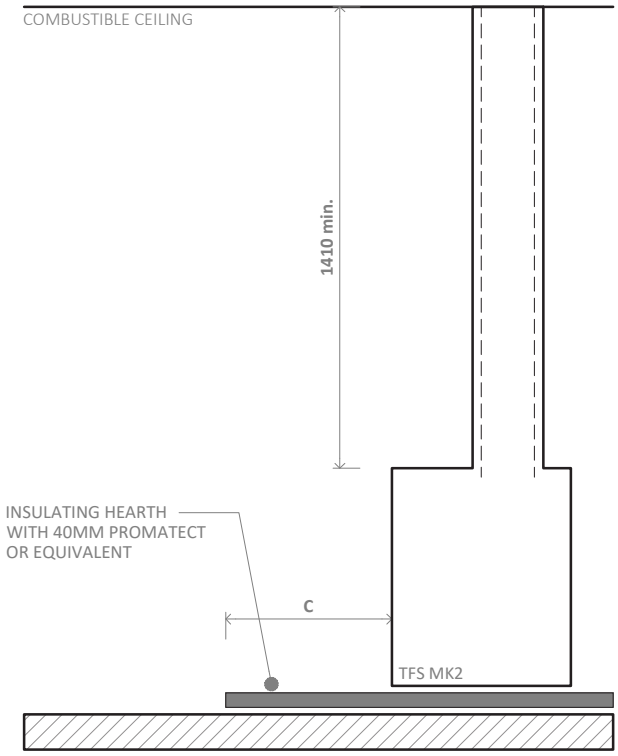

FLOOR INSTALLATION B

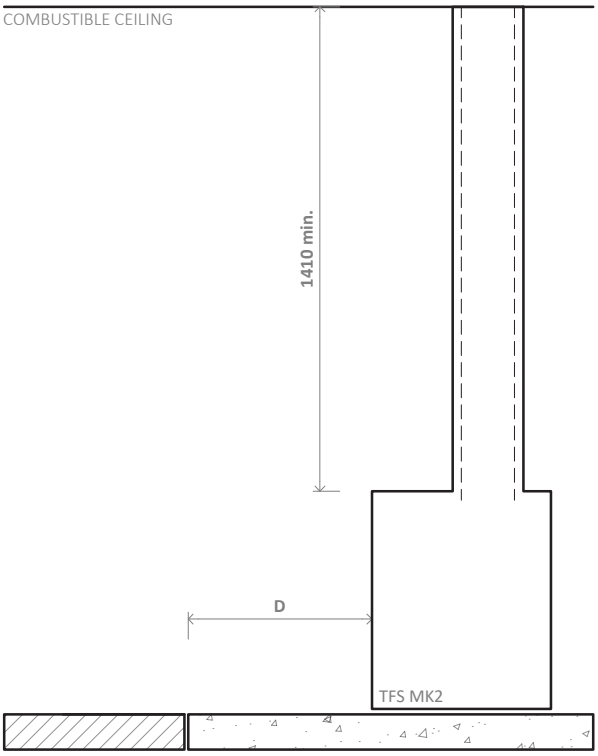

B7. BASE OPTIONS

A continuous, non-combustible base is essential to take the weight of the fireplace and flue system above. Escea offers both glass reinforced concrete and painted sheet-steel plinth options, crafted to enhance the TFS Series MK2 Freestanding Fireplaces.

A custom base can be manufactured to your design, provided it is suitably engineered to support the weight of the fireplace and flue, and complies with all hearth and clearance specifications in Sec. B6.

Plinth	Compatible Model	Plinth Dimensions
650 Slim Plinth *(Black Steel)*	TFS650 MK2	650w x 375h x 506d
850 Slim Plinth *(Black Steel)*	TFS850 MK2	818w x 375h x 506d
1000 Slim Plinth *(Black Steel)*	TFS1000 MK2	998w x 375h x 506d
650 Wood Fire Plinth *(GRC)*	TFS650 MK2	650w x 300h x 506d
1000 Wood Fire Plinth *(GRC)*	TFS650 MK2, TFS850 MK2, TFS1000 MK2	1000w x 375h x 506d
1500 Wood Fire Plinth *(GRC)*	TFS650 MK2, TFS850 MK2, TFS1000 MK2	1500w x 375h x 506d
Universal Plinth	TFS650 MK2, TFS850 MK2, TFS1000 MK2	1016w x 375h x 535d
850 Designer Plinth *(Black GRC)*	TFS650 MK2, TFS850 MK2	850w x 375h x 530d
1150 Designer Plinth *(Black GRC)*	TFS650 MK2, TFS850 MK2, TFS1000 MK2	1150w x 375h x 530d
1550 Designer Plinth *(Black GRC)*	TFS650 MK2, TFS850 MK2, TFS1000 MK2	1550w x 375h x 530d

SLIM PLINTH (BLACK STEEL)

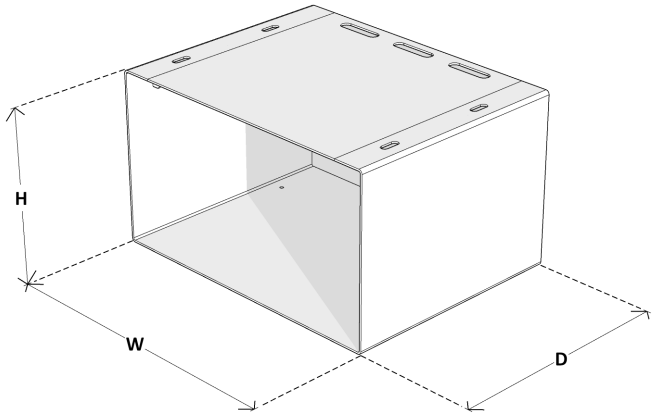

GRC WOOD FIRE PLINTH AND UNIVERSAL PLINTH

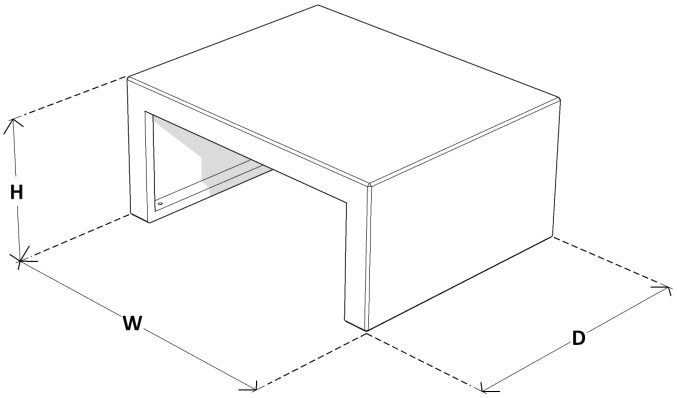

DESIGNER PLINTH (BLACK GRC)

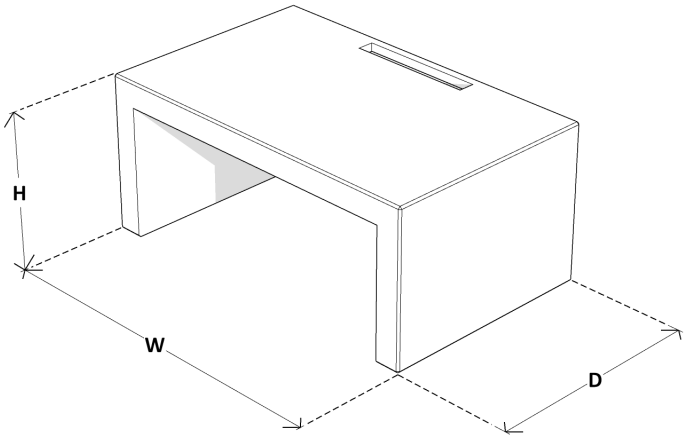

B8. HEAT SHIELDING

Heat shields reduce the required clearances between an appliance and heat-sensitive surfaces, in accordance with *AS/NZS 2918*. The shield must extend in all directions to at least the tested safety clearance, unless restricted by walls, floors, or other shields.

Reduced Clearance: Tested clearance × Shield clearance factor.

Multi-layer shields: The air gap must be ventilated at top and bottom. If horizontal, opposite edges must be vented. Total ventilation opening ≥ 50% of air gap cross-sectional area.
Masonry is an acceptable shield material.

Heat Shield Construction	Air Gap Size	Clearance Factor
Single layer of continuous material	12mm	0.40
Single layer of continuous material	25mm	0.30
Two spaced layers continuous material	12mm + 12mm	0.20

Model	A	B	C
TFS650 MK2	350mm	120mm	Highest of 1200mm from Fireplace or 600mm down from ceiling
TFS850	350mm		
TFS1000 MK2	360mm		

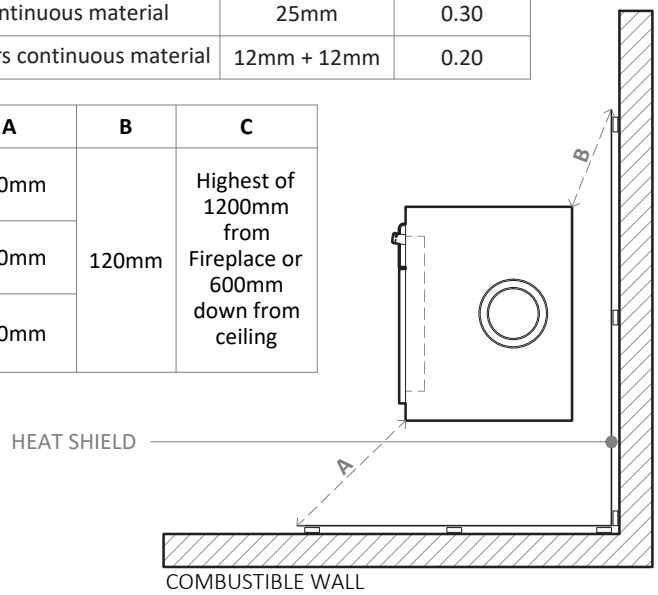

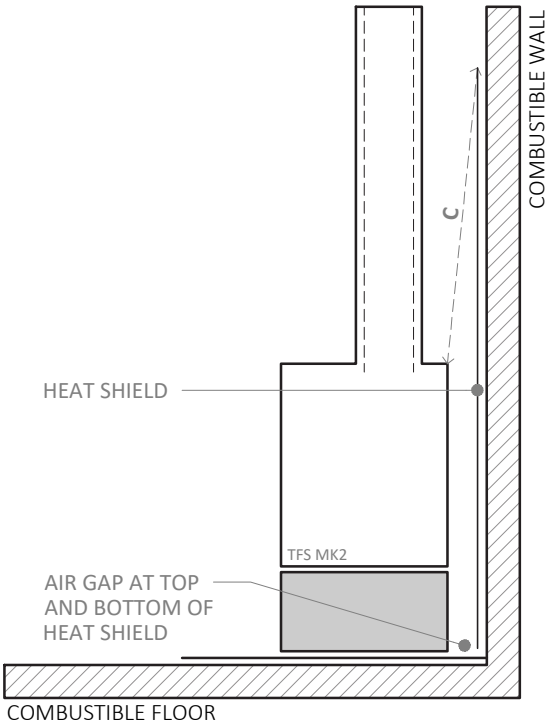

B9. CEILING PLATES

All Escea TFS MK2 Freestanding flues are to be finished with a ceiling plate. This plate overlaps the hole made within the ceiling for the flue pathway. Each ceiling plate is designed to provide a minimal gap between the Insulated Flue Starter Pipe and the inner ring of the ceiling plate. The TFS Insulated Freestanding Flue Kit is supplied with a ceiling plate for a flat ceiling.

Escea provides various ceiling plates, designed for multiple ceiling configurations. Refer to the table below to select a ceiling plate appropriate for your ceiling pitch.

Ceiling Pitch	Ceiling Plate Range	Ceiling Plate Dimensions	Part Number
Flat	0 - 10°	430 x 430mm	903659
15°	11 - 20°	430 x 440mm	903660
25°	21 - 27°	430 x 455mm	903674
30°	28 - 32°	430 x 460mm	*Contact Escea*
35°	33 - 37°	430 x 475mm	903661
40°	38 - 42°	430 x 490mm	*Contact Escea*
45°	43 - 47°	430 x 540mm	903662

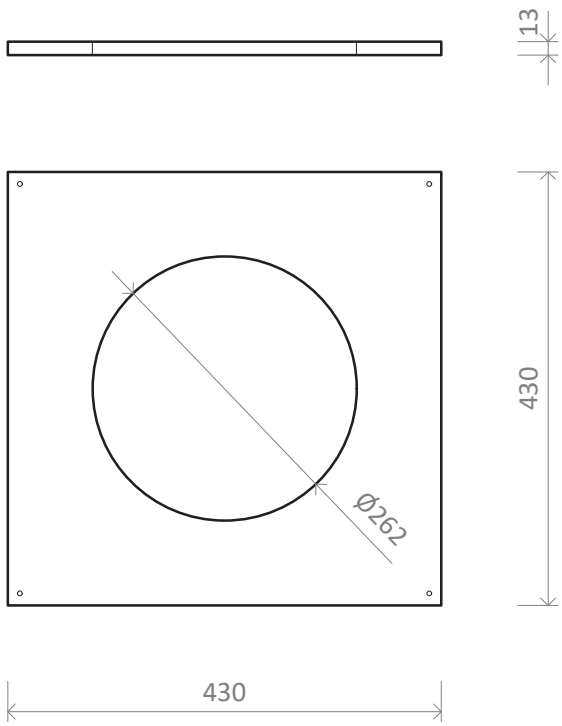

PLAN

**Flat ceiling plate shown*

B10. SPECIFYING FLUE EXTENSIONS

Extensions are not required on all installations but to be used where the flue height needs to extend.

Use a double skin flue configuration when visible off the freestanding fireplace and within the room.

Use the Insulated Flue Pipes (Triple Skin) where the flue is passing through a chimney cavity, roof space, wall or floor.

B11. SAFETY CLEARANCES

A minimum of 25mm must be maintained from the 250mm outer flue liner to any adjacent combustible material or surface.

B12. FLUE FLASHING

All roof or wall penetrations are to be made weather tight by way of a flashing plate, or proprietary EPDM boot flashing, for compliance with the National Construction Code. The specification and installation of the flue flashing is the responsibility of the Specifier and/or Installer.

B13. FLUE COWL EXTERNAL CLEARANCES

Flue height is the greater of the minimum flue length (4.6m) or the external clearance requirements below. Select the applicable condition to establish the final cowl height. Shorter flues risk smoke spillage and longer flues may reduce burn time.

A cowl must not be obstructed by adjacent buildings or structures.

Height	Condition	Requirement
A	Cowl < 3m (horizontal) of roof high point.	Flue Height A.
B	Cowl > 3m (horizontal) from roof high point.	Flue Height B: Raise cowl until 3m horiz. line clears the roof.
C	Cowl <6m (horizontal) of an adjacent building/wall.	Flue Height C: Raise cowl until 6m horiz. line clears the structure.

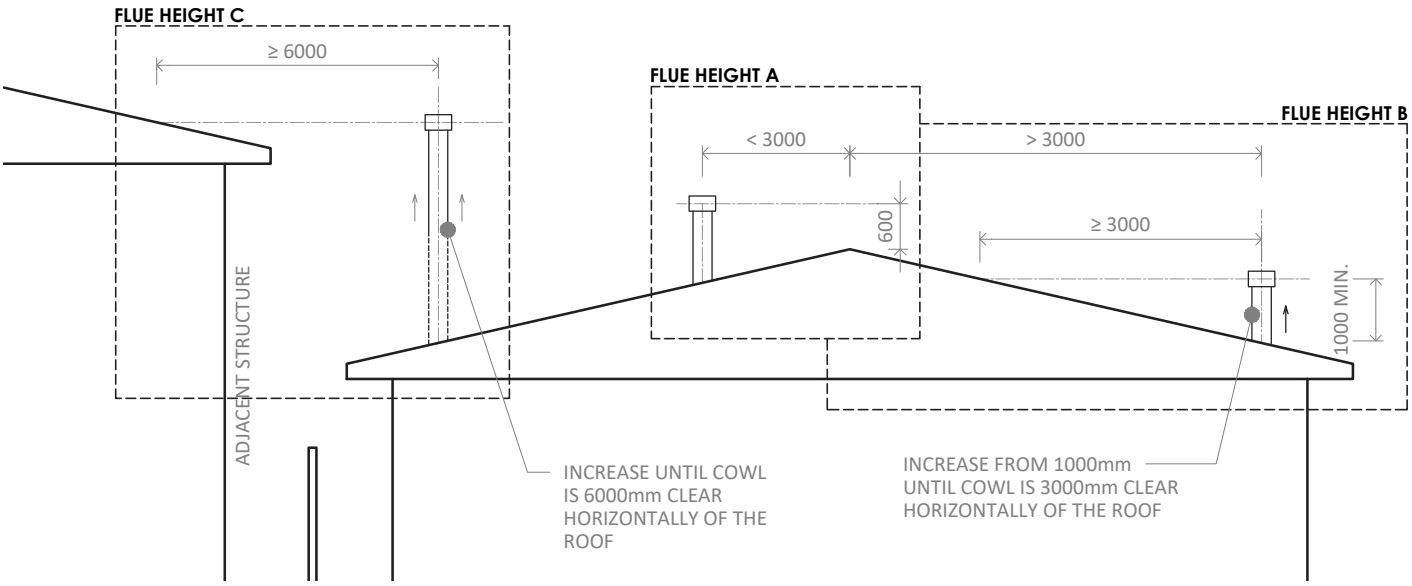

B14. FLUE DETAIL

The Escea TFS Series MK2 Freestanding Insulated flue kit comprises a twin skin flue system from the fireplace to the ceiling. At the ceiling the Escea Insulated Flue system begins and extends to the cowl.The visible 200mm Ø flue is painted black. A proprietary cowl is used to finish the flue system above the roof.

Note: Flue lengths of less than 3.6m may experience reduced draught and potential operational issues, depending on their specific installation conditions.

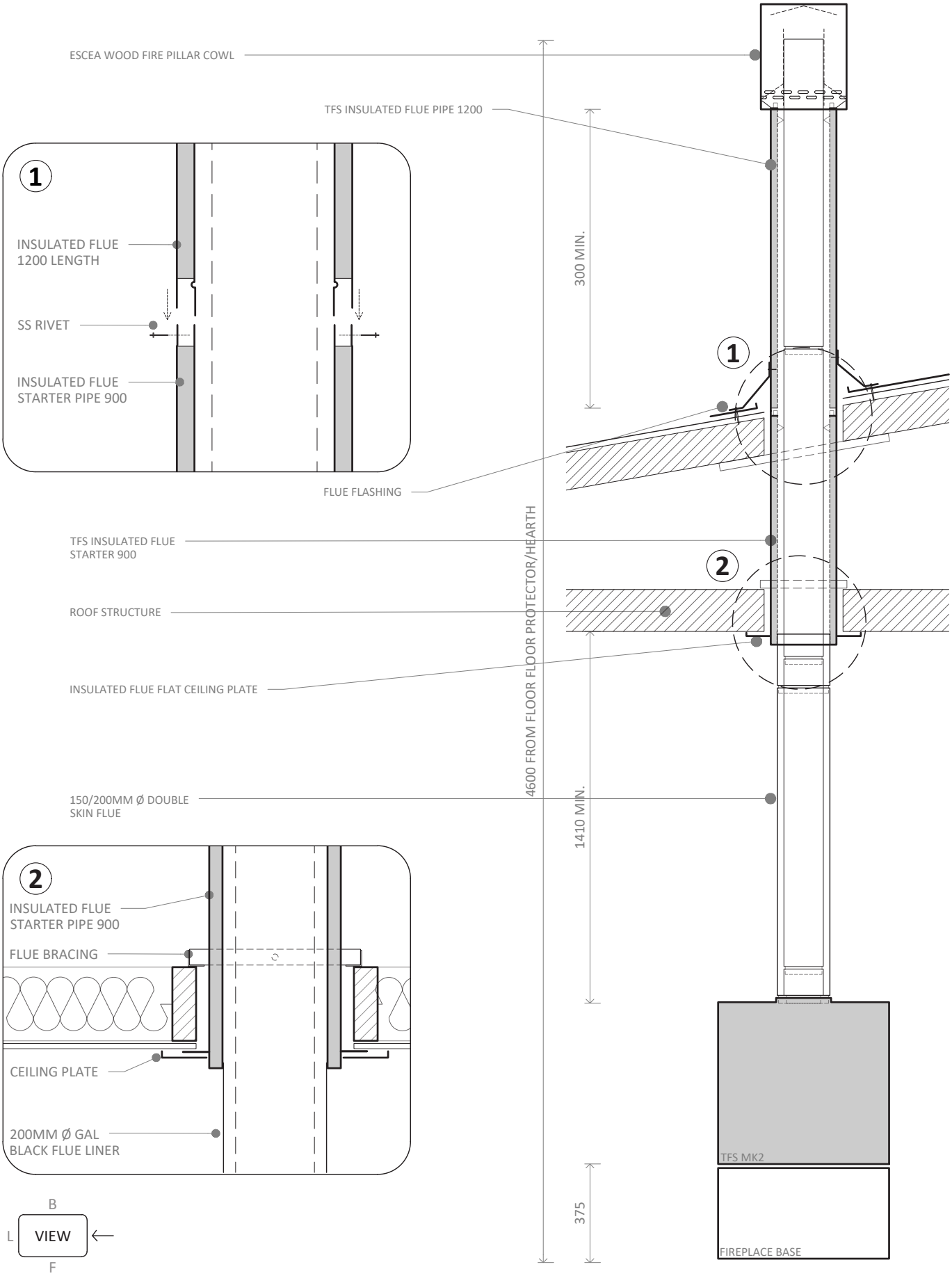

B15. EXTERNAL WALL PENETRATION - DOUBLE SKIN

Where the TFS SERIES Insulated Freestanding Flue passes through an external wall, from double skin to triple skin, this must be configured with an Insulated Flue Starter Offset Kit, to achieve a triple skin wall penetration. Parts required are listed below.
A wall thimble is available to support the flue as it passes through the wall, externally.

- 1x 45° Freestanding Insulated Offset Starter Kit
- 1x Wall Thimble
- 1x 45° External Wall Plate
- 1x 45° Ceiling Plate
- 1x Insulated Flue Extension length 600 or 900.

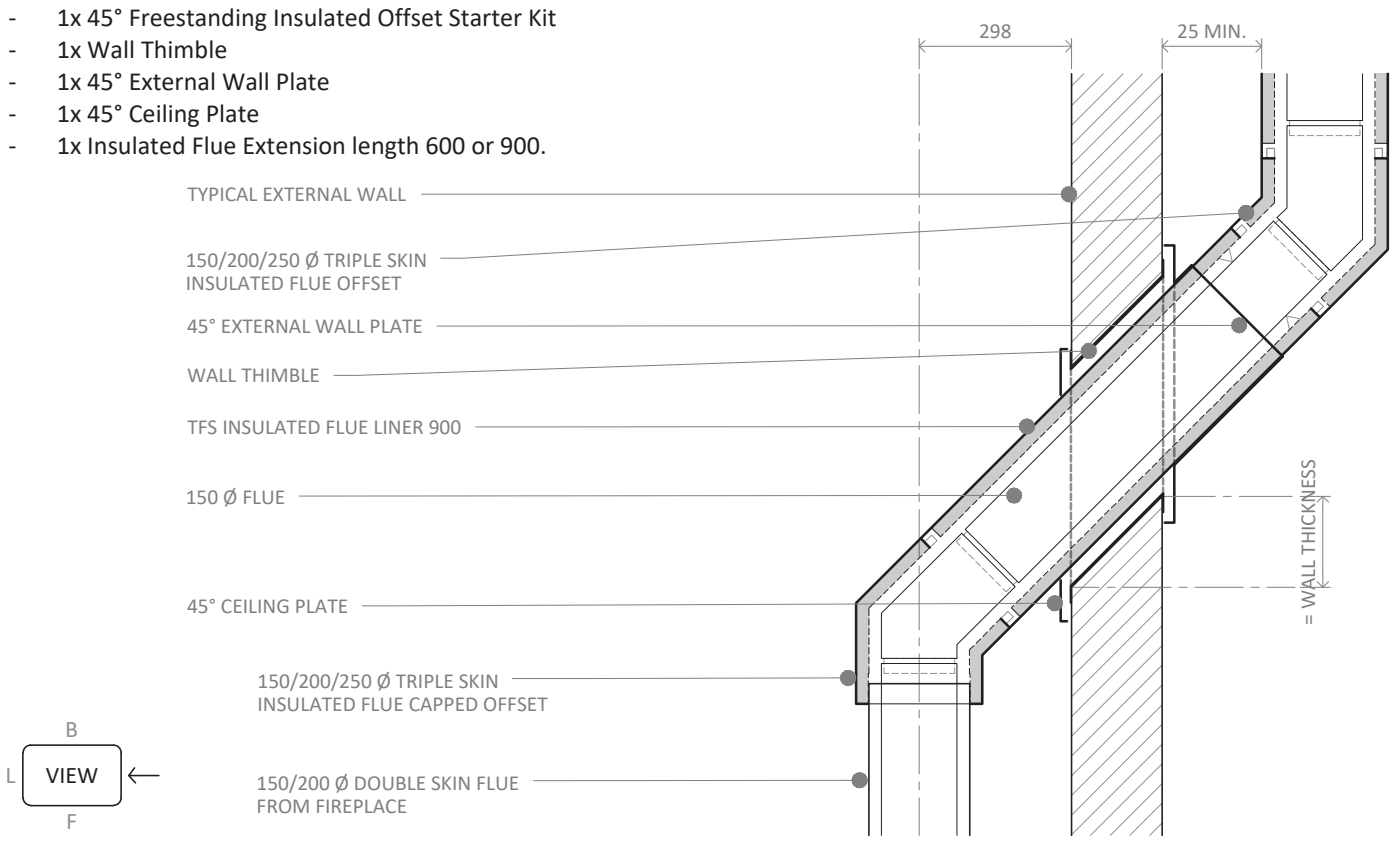

B16. EXTERNAL WALL PENETRATION - TRIPLE SKIN

Where the TFS SERIES Insulated Freestanding Flue passes through an external wall, using triple skin flue, this must be configured with an Insulated Flue Offset Kit, to achieve a triple skin wall penetration. Parts required are listed below.
A wall thimble is available to support the flue as it passes through the wall, externally.

- 1x 45° Freestanding Insulated Offset Kit
- 1x Wall Thimble
- 1x 45° External Wall Plate
- 1x Insulated Flue Extension length 600 or 900.

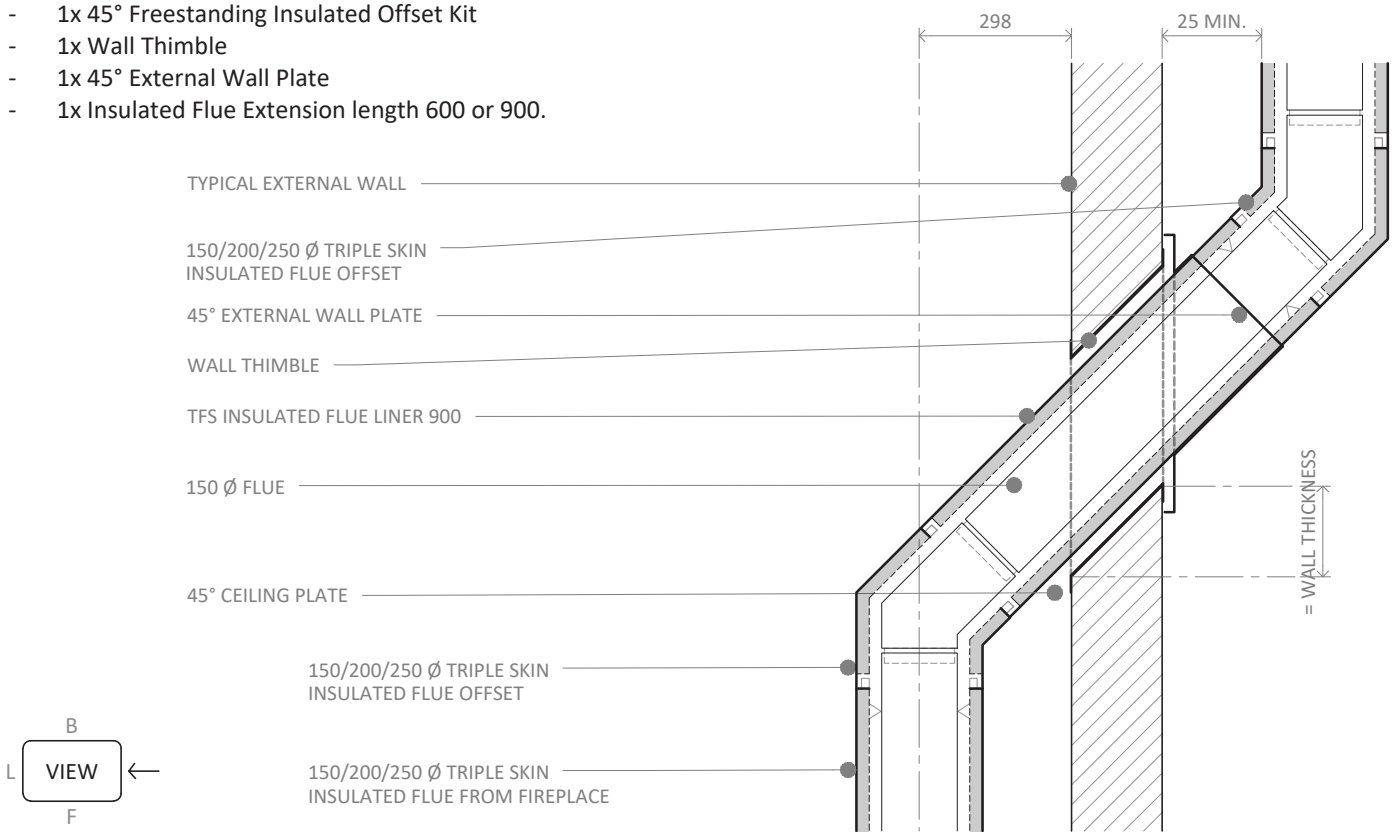

B17. FLUE OFFSETS OR BENDS

45° flue offsets are available in double skin or triple skin options. Double skin are used when offsetting above the fireplace and within the room (a visible offset). A triple skin offset is used where the flue is passing through a chimney cavity, roof space, wall or mid floor.

Flue offsets can reduce draw within the flue pathway; it is recommended to avoid where possible or allow for an extensions of the flue length to over come the draw restriction. Allow for 600mm above the fireplace before using any offset.

DOUBLE SKIN OFFSET

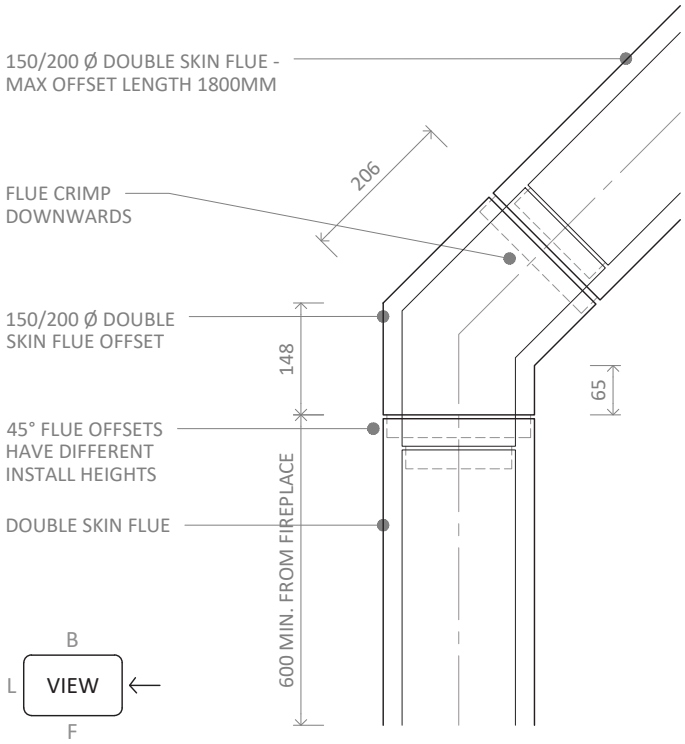

TRIPLE SKIN OFFSET

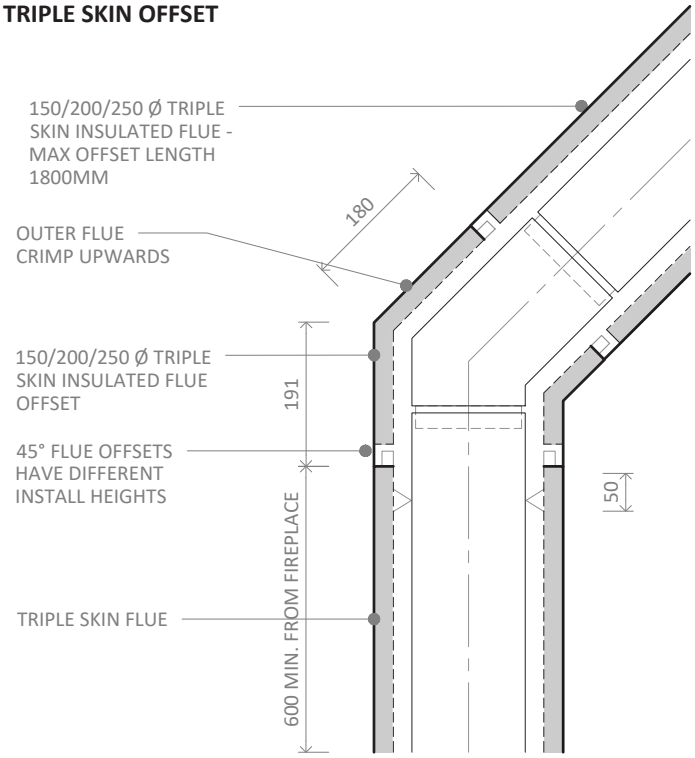

B18. MID-FLOOR DETAIL

Where the TFS SERIES MK2 Flue passes through a combustible mid-floor, the 250mm Ø outer liner must maintain a 25mm clearance to any combustible material. An additional ceiling plate (with 250mm Ø cut-out) will be required to complete the mid-floor penetration.

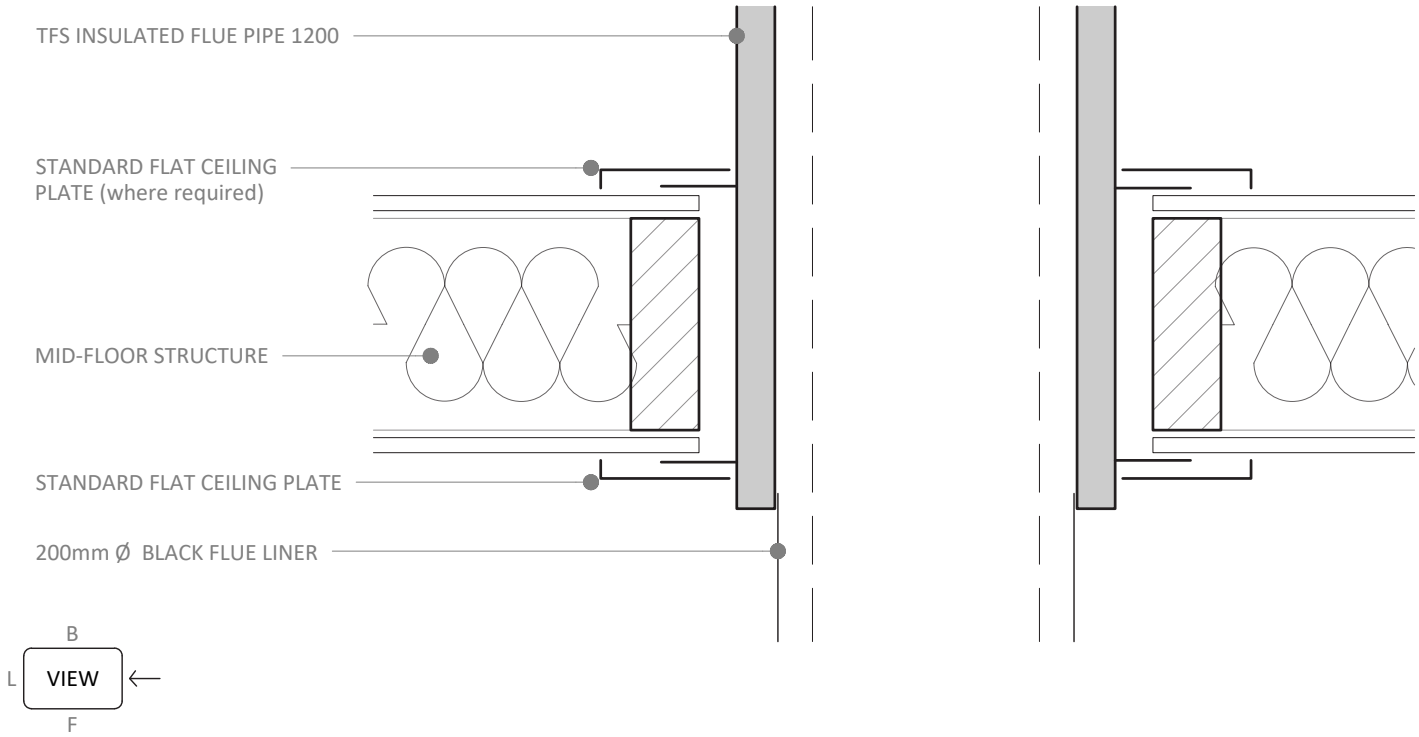

B19. CAVITY VENTILATION - CHIMNEY CAP VENT

In accordance with *AS/NZS 2918:2018 Sec 3.4*, masonry or timber-framed chimney chases must be vented at the **BASE** and **TOP** with obstruction-free, vermin-proof, weatherproof vents, with a **minimum 10,000mm² free open area** each. Flue casing or liner ventilation does not count toward this requirement.
NOTE: A chimney cavity, with the above venting, will affect meeting the BAL rating requirements of the building (AU ONLY).

No combustible materials at chase termination points.

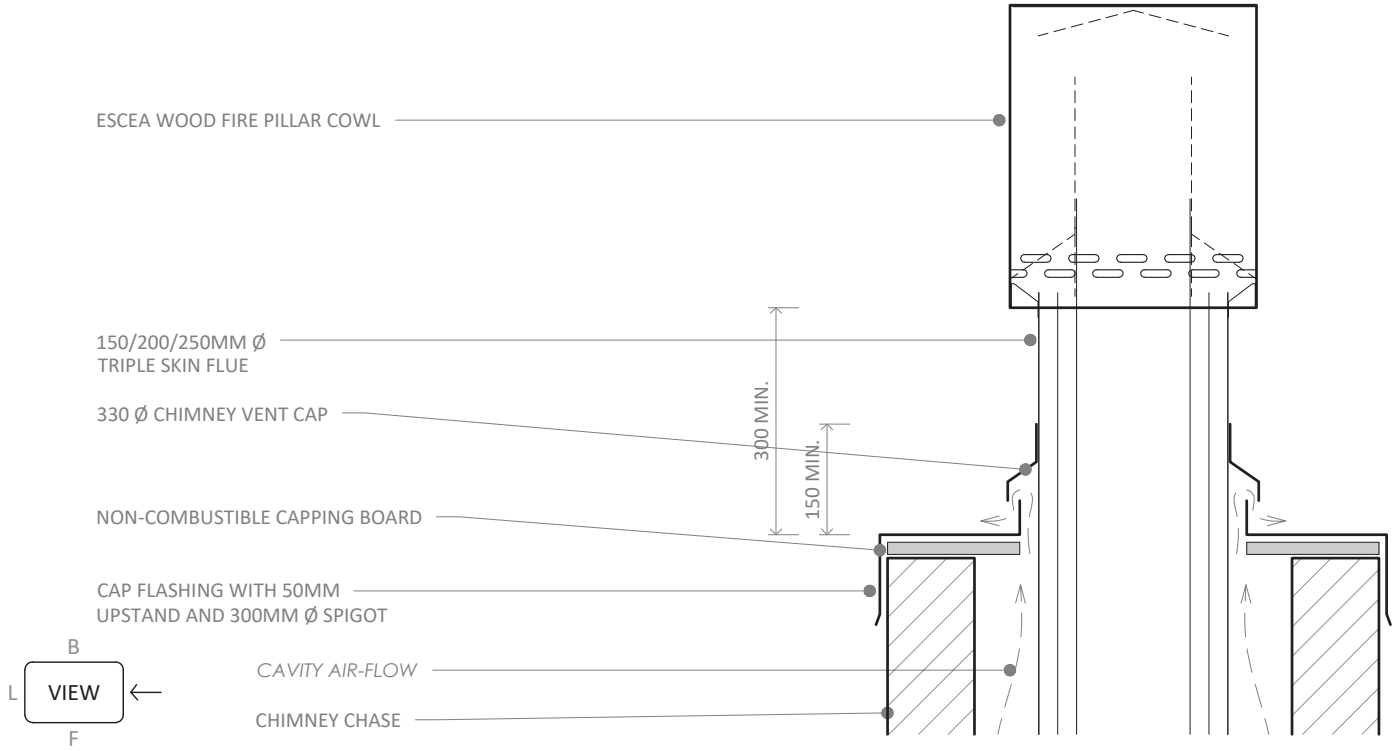

B20. CAVITY VENTILATION - CHIMNEY WALL VENT

In accordance with *AS/NZS 2918:2018 Sec 3.4*, masonry or timber-framed chimney chases must be vented at the **BASE** and **TOP** with obstruction-free, vermin-proof, weatherproof vents, with a **minimum 10,000mm² free open area** each. Flue casing or liner ventilation does not count toward this requirement.
NOTE: A chimney cavity, with the above venting, will affect meeting the BAL rating requirements of the building (AU ONLY).

No combustible materials at chase termination points.

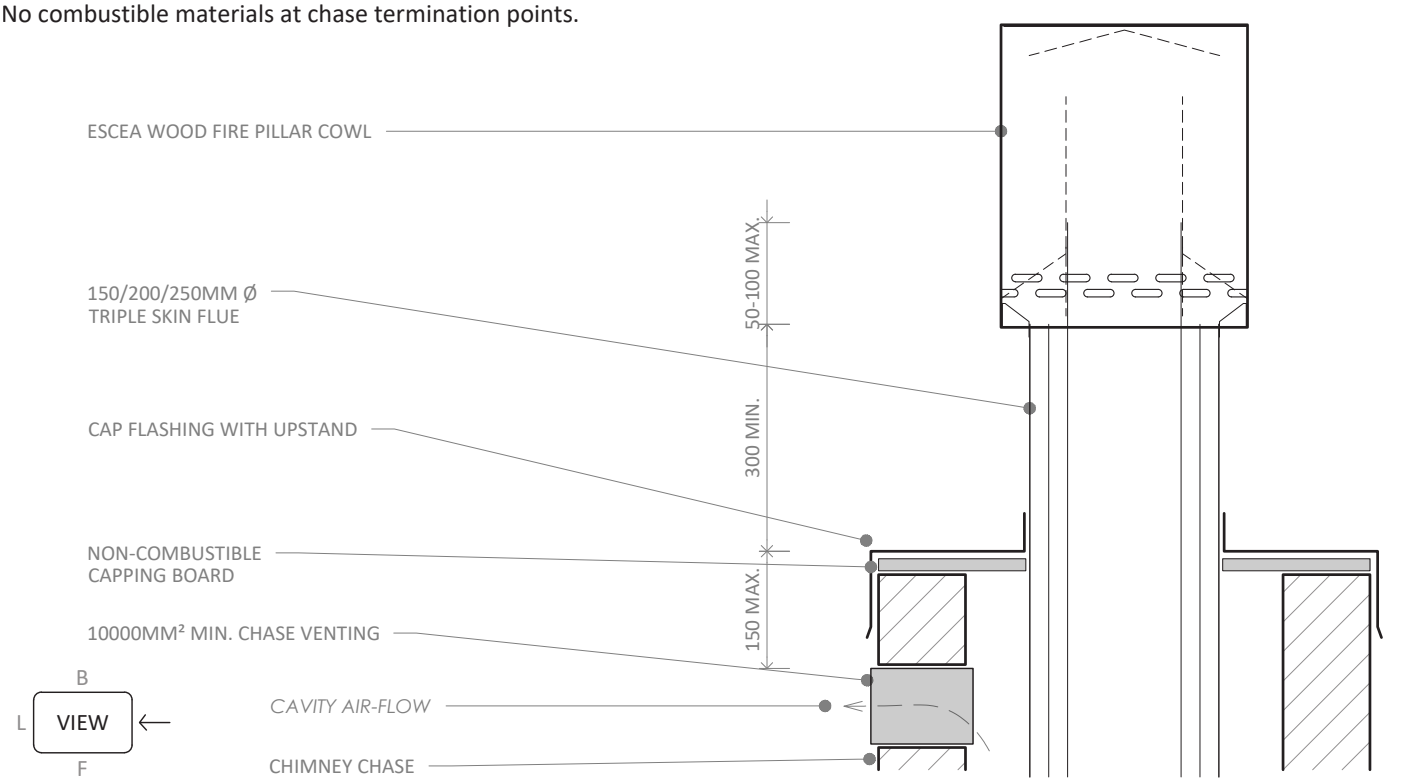

C INSTALLATION

C1. HEARTH INSTALLATION

1. To begin the installation locate the flue centreline from inside the building, ensuring the flue pathway is clear of obstructions. Use the clearances to combustibles in Sec. B5 or B6 to position flue centre.
2. Install the floor protector to the required minimum dimensions, defined from Sec. B4, B5 or B6.
3. Create a hole in the ceiling a minimum of 300mm x 300mm.

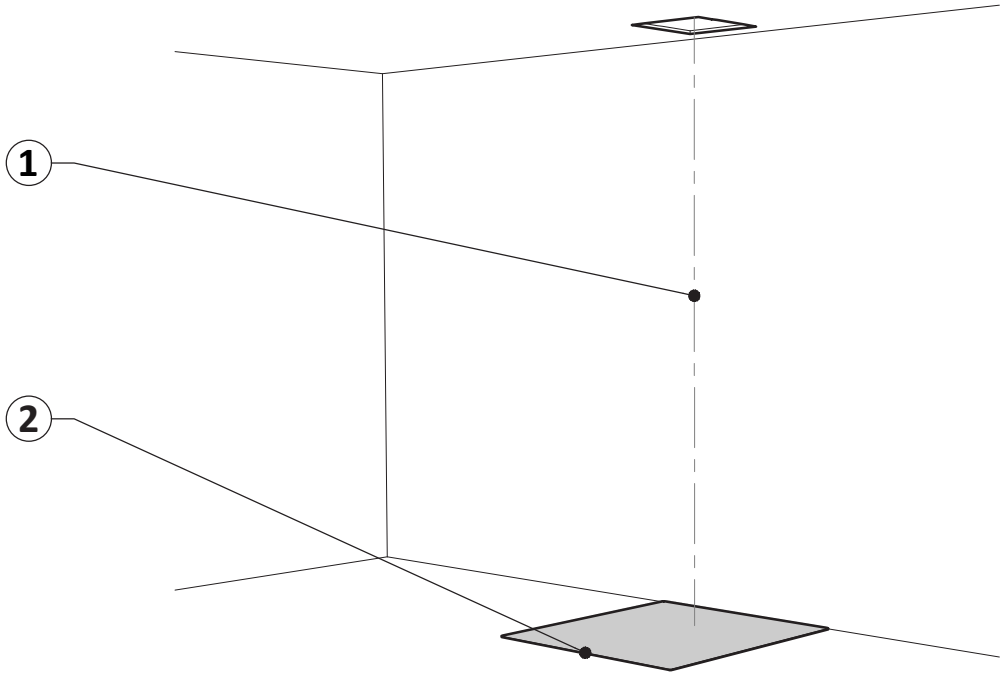

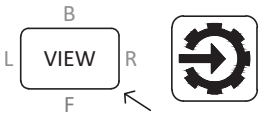

C2. SEISMIC RESTRAINT

SEISMIC RESTRAINT REQUIRED IN ALL INSTALLATIONS — AS/NZS 1170.5

All TFS MK2 Freestanding Wood Fireplaces are to be restrained to a plinth, base or floor using suitable, appropriately sized fasteners anchored into structural components.

Use the flow chart below to select the appropriate fixing solution. Transfer the base fixing layout onto your selected base, plinth or floor. *Note: Timber structures may require an insulating board protective layer in accordance with Sec. B6.*

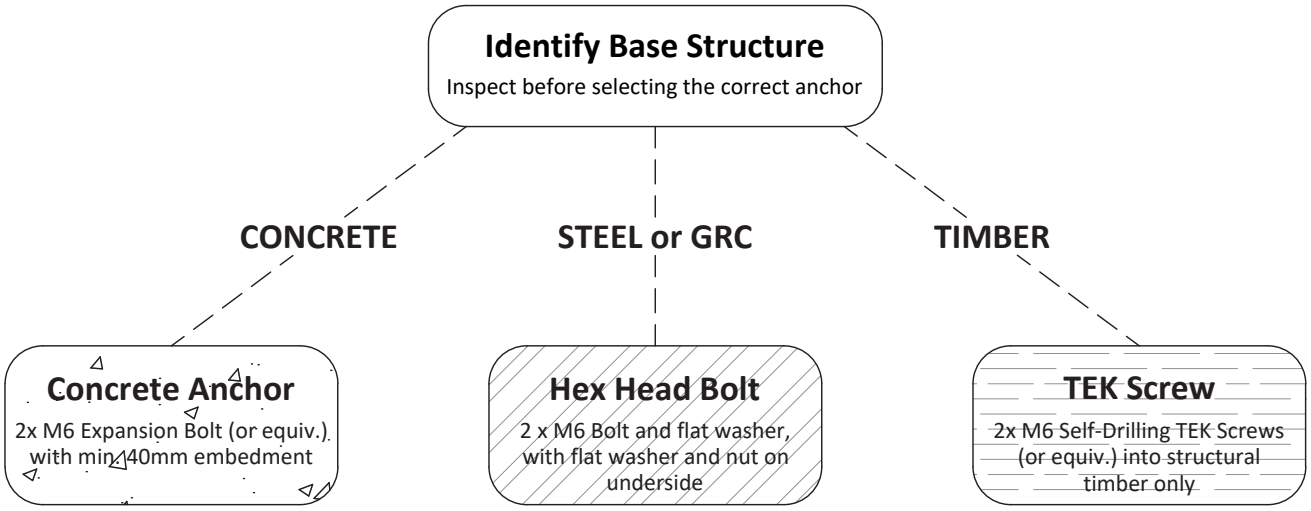

C3. FIREPLACE RESTRAINT - OPTION 1

There are two restraint options for the TFS MK2 Freestanding Fireplace. Select the most appropriate for your base.

Option 1: Using the supplied L-brackets fixed to the back panel, fix the L-bracket to the floor or base. The brackets can be concealed underneath the appliance or exposed behind the appliance (*see right).* Fix the brackets to the base or the fireplace in the numbered order.

CONCEALED FIXING

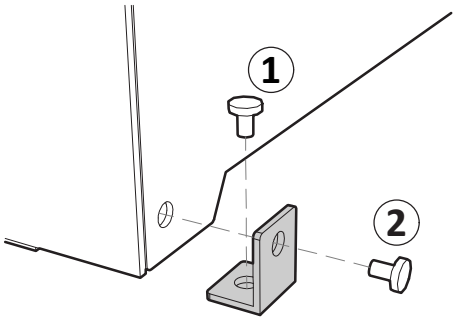

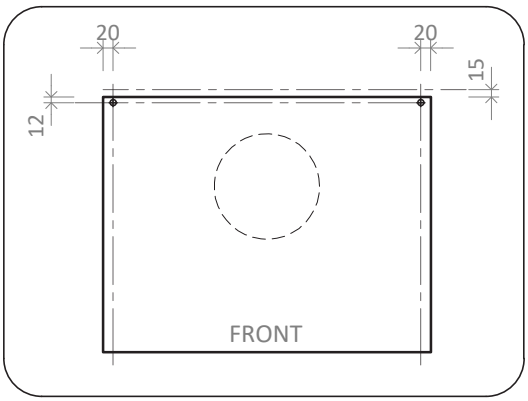

EXPOSED FIXING

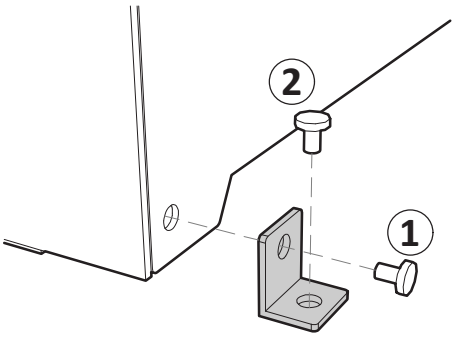

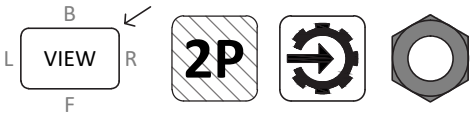

C4. FIREPLACE RESTRAINT - OPTION 2

Option 2: Locate the corresponding holes on the appliance base onto your GRC, Steel or custom base. Escea GRC or steel plinths will use Option 2.

1. Select the desired plinth for the installation of the TFS Series MK2 Fireplace. An Escea GRC plinth is shown below.
2. Place the plinth onto the floor protector accommodating for the fireplace position and required clearances.
3. Mark and drill out holes through the floor protector, into the floor structure below for restraining the plinth. Fix the plinth to the floor using fixings appropriate to the floor type.
4. Following the layout below, mark and drill out 2x 8mm holes in the plinth top.

**Refer to Appendix for Designer Plinth fixing or restraint.*

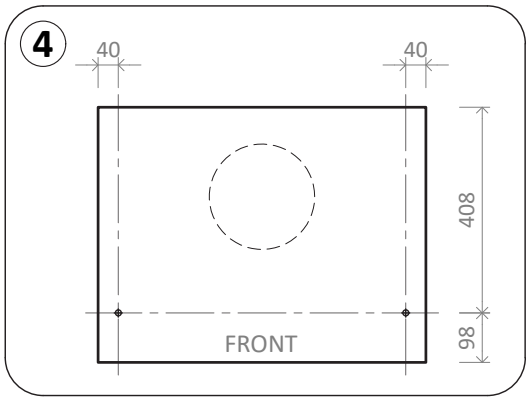

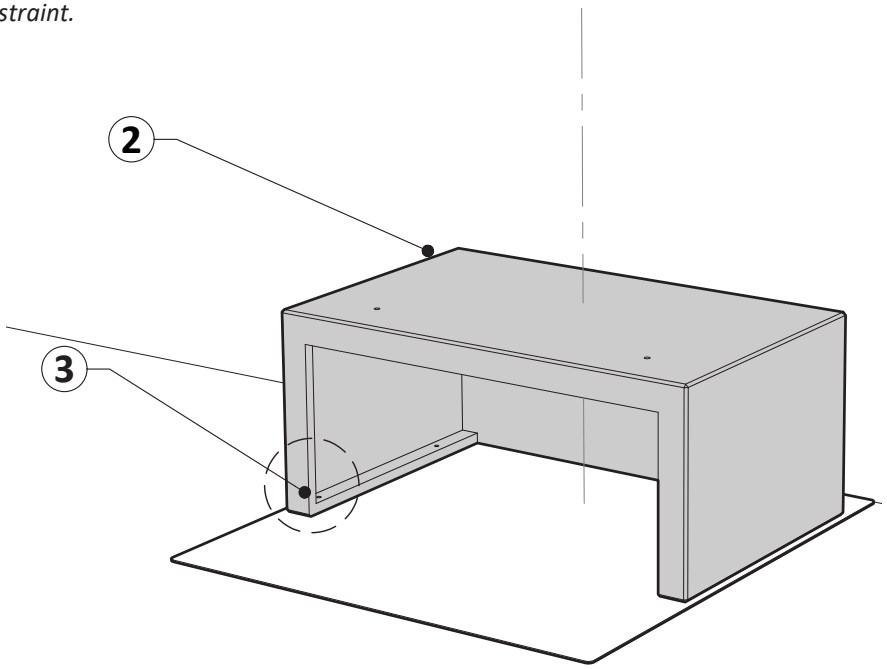

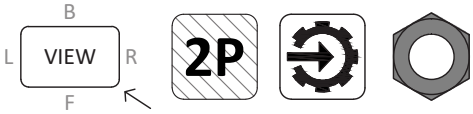

C5. FIREPLACE INSTALLATION

1. 2 PERSON LIFT - Fit the fireplace onto the plinth, aligning the holes on the fireplace base to the Option 2 restraint method in Sec C4.
2. Using the supplied 2x (M8x50) Hex Head Bolts and washers, fix the fireplace to the plinth.

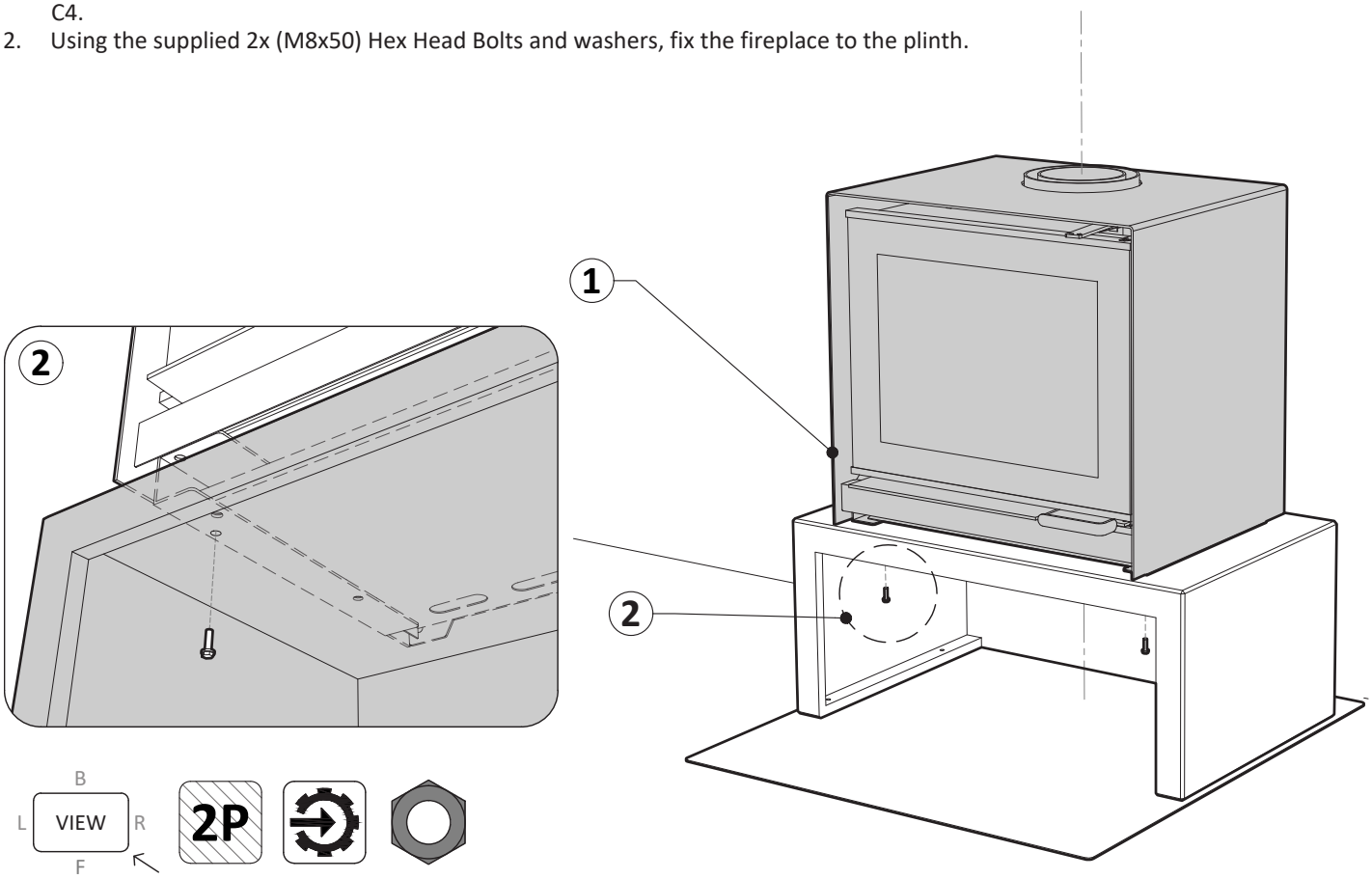

C6. ROOF PENETRATION

1. Using the flue centreline, create a 300 x 300mm square hole in the ceiling and an approx 300mm Ø hole in the roof, ensuring a 25mm gap to combustible materials. Where the roof space is inaccessible or for a retrofit, removal of the roofing may be required.

**This diagram is shown cutaway.*

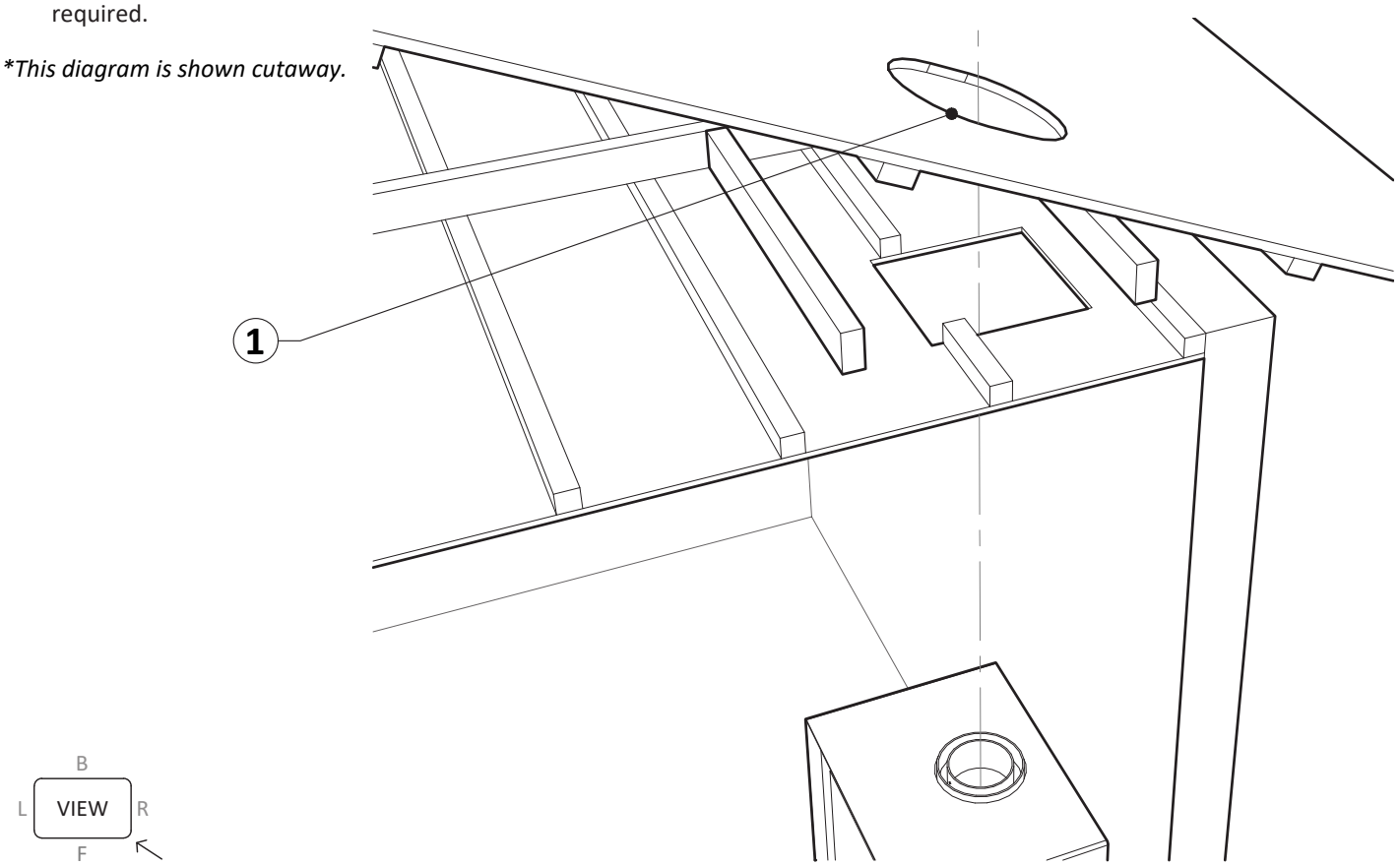

C7. ROOF BRACING INSTALLATION

1. Add framework between rafters or trusses at 600mm crs, to support the flue bracing.
2. Position and fix the supplied 1200mm long L-brackets equidistant off the flue centreline. They should be a minimum of 350mm apart and face inwards. *No fixings are supplied.*
3. Find the width (**W)** and trim the shorter L-brackets to length.

**This diagram is shown cutaway.*

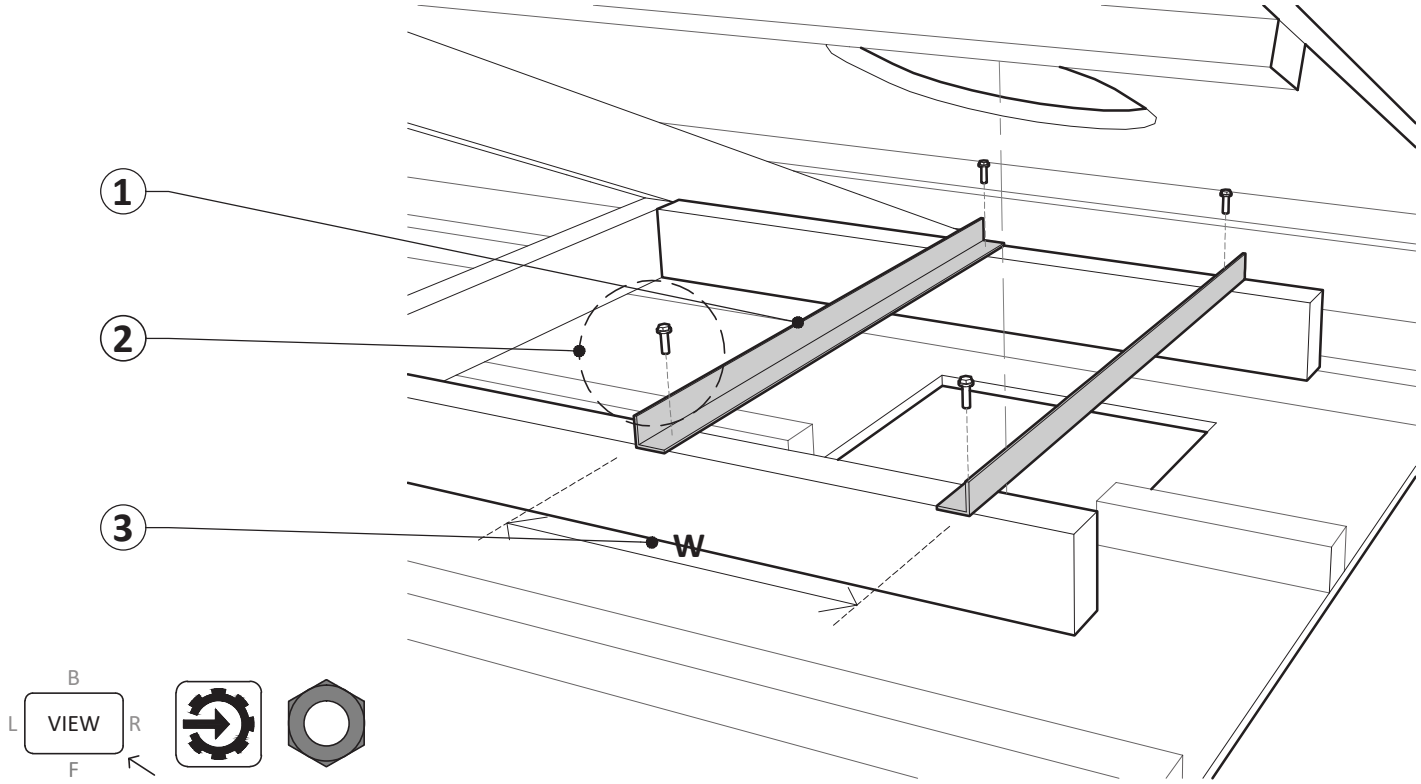

C8. CEILING PLATE INSTALLATION

This step is to be completed after Step 9.

1. Below the ceiling, fit the overlapping inner ceiling plates to the ceiling (at the centres), closing the gap to the Insulated Flue Starter Pipe 900.
2. Apply a continuous bead of Black High Temp Silicone to the junction of inner ceiling plates and Insulated Flue Starter, to seal the flue penetration through the roof.
3. Fit the outer ceiling plate, fixing at the 4 corners using the screws and spacers provided.

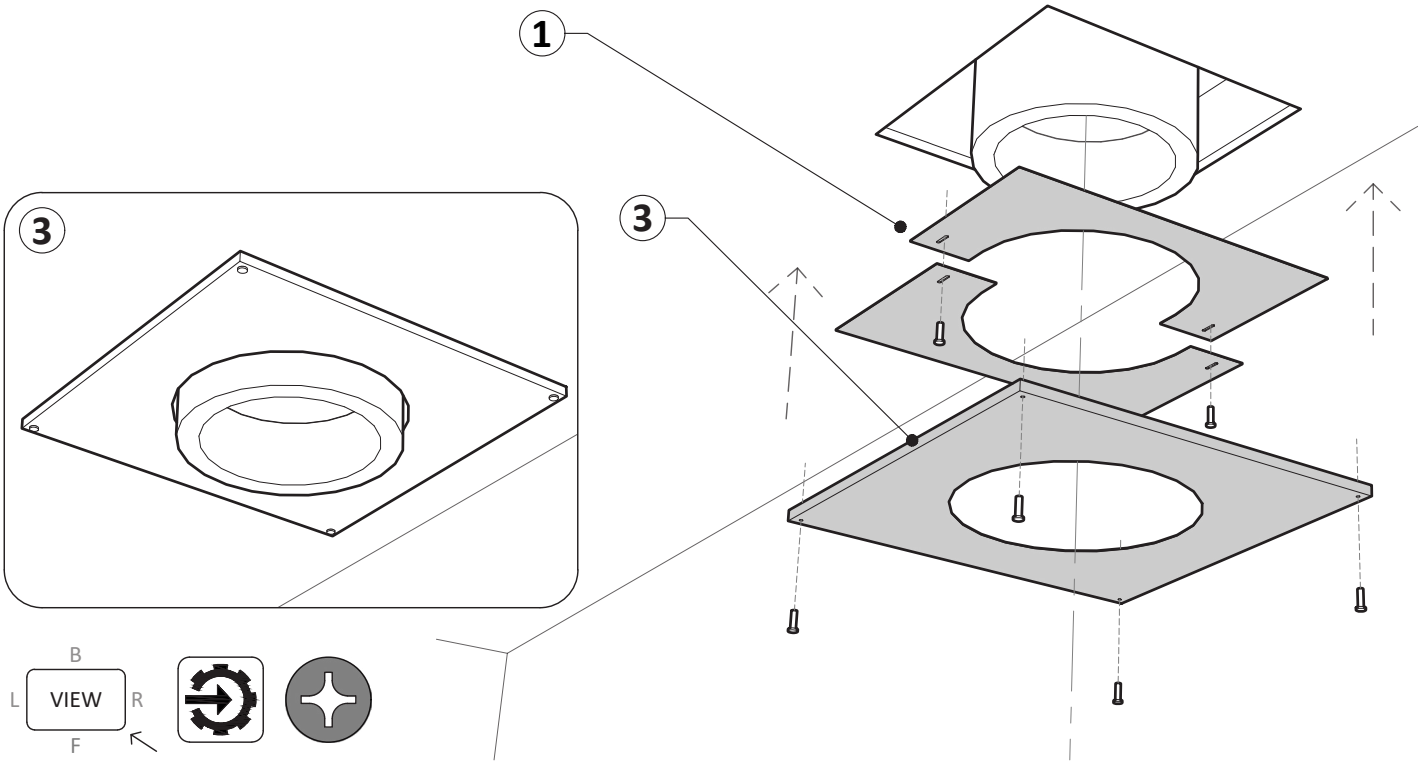

C9. FLUE INSTALLATION - STEP 1

1. Establish the height of **X**. This determines the fixing location for the flue cross bracing, onto the Insulated Flue Starter Pipe (900). Establish the amount of exposed Insulated Flue Starter Pipe to be visible in below the ceiling (**Y**), min. 25mm - max. 150mm. *Note the ceiling plate is 12mm deep.*
2. Measure up from the base of the Insulated Flue Starter Pipe, and align the base of the shorter L-brackets to this point. Fix brackets to the Insulated Flue Starter Pipe, using 6G x 25 TEK Screws.
3. From the roof lower the Insulated Flue Starter Pipe with fixed braces, onto the roof mounted L-brackets to form a cross-braced support. Fix the L-brackets together with 6G x 30 TEK screws.
4. Fit the ceiling plate - *Refer to Sec. C8.*

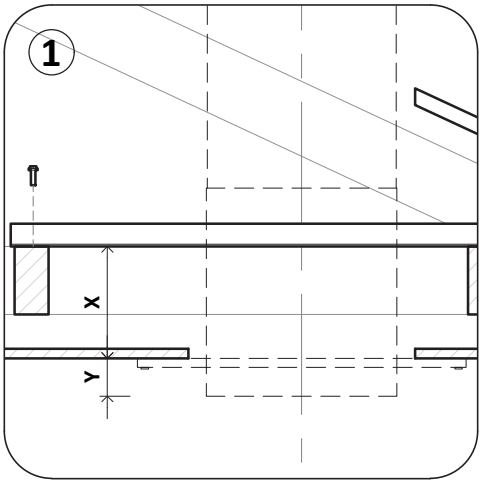

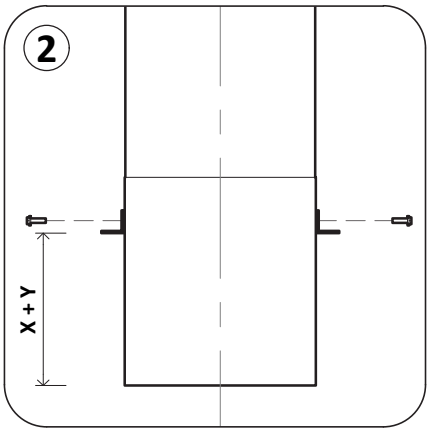

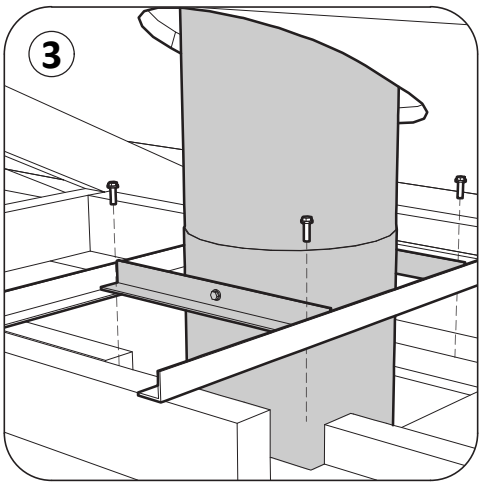

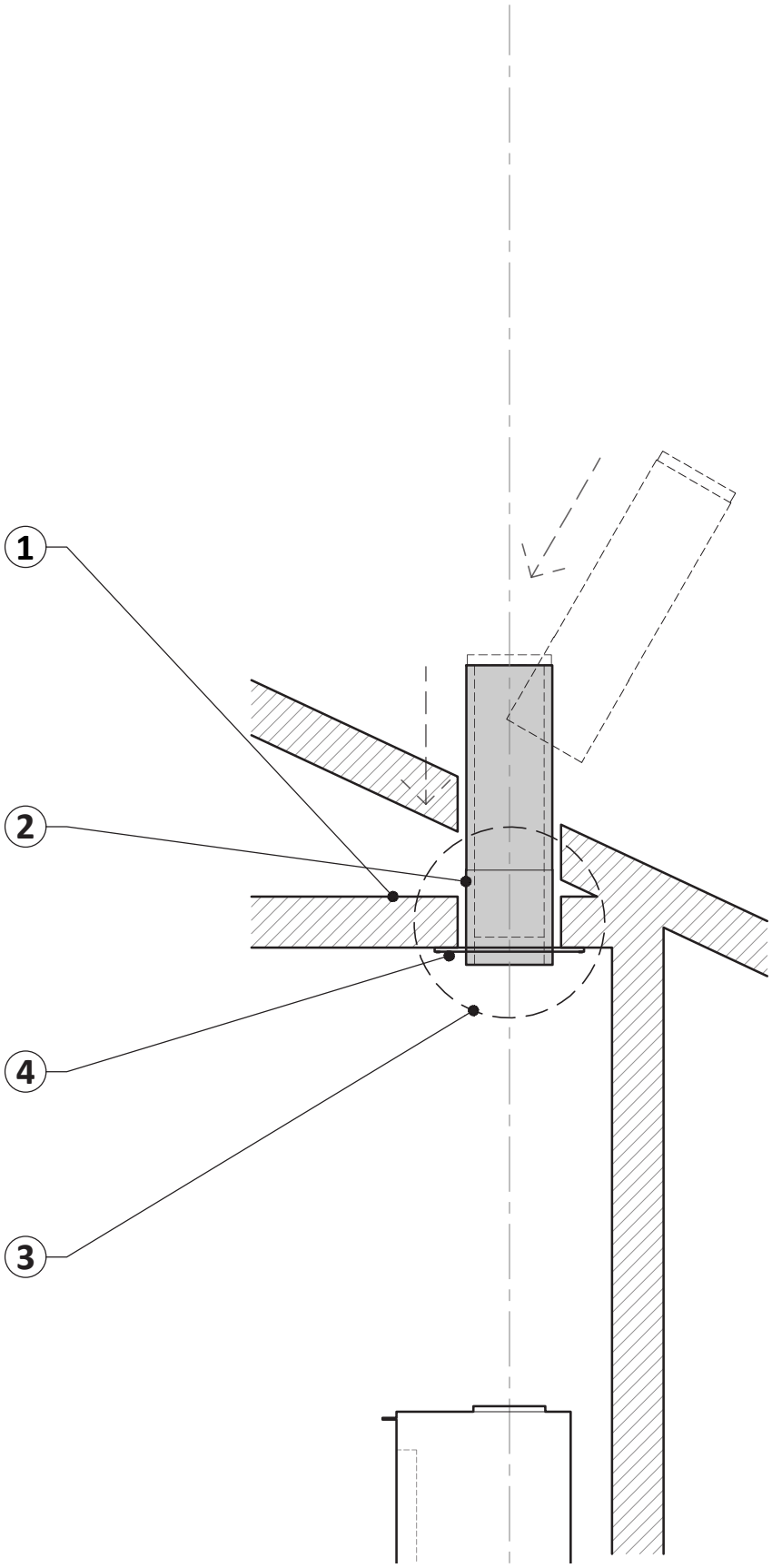

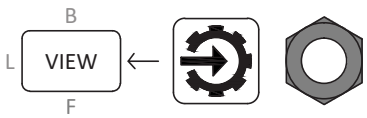

C10. FLUE INSTALLATION - STEP 2

1. Measure from the top of the flue spigot to the underside of the Insulated Flue Starter (**H**). Temporarily join the 2x 200mm Ø black liners and trim the upper liner to the total height of H + 20mm (*from swage to trimmed end*).
2. Slide the shorter 200mm Ø black liner, trimmed end upwards, into the Insulated Flue Starter 900. Slide upwards to allow to fit the lower 200mm Ø black liner.
3. Fit the lower 200mm Ø black liner (crimp down) and slide the upper 200mm Ø black liner back into place. Rivet both together with SS Rivets.
4. Fit roof flashings at this point - refer to Step C15.

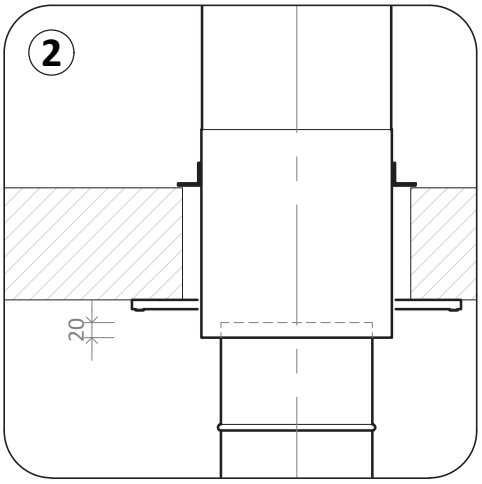

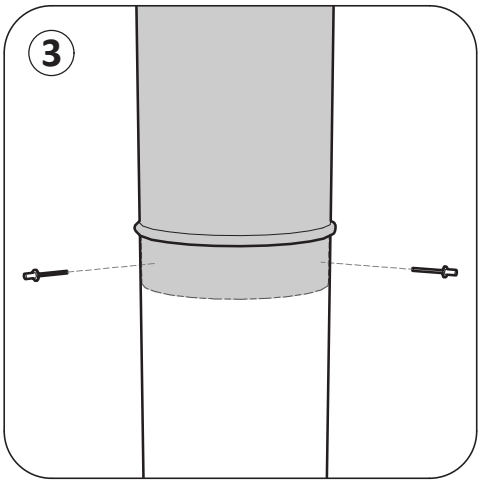

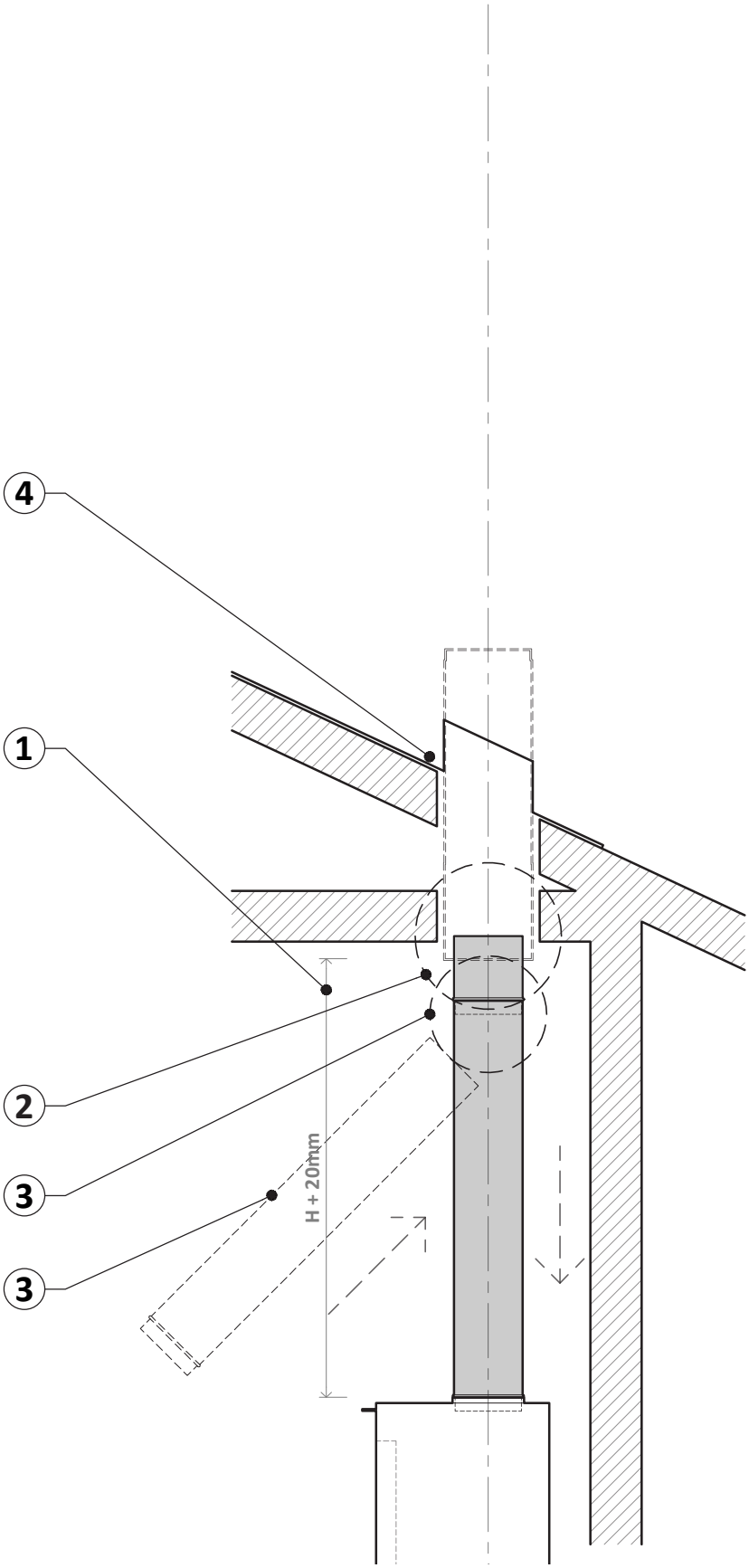

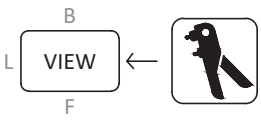

C11. FLUE INSTALLATION - STEP 3

1. Fit 1x 150mm and 2x 1200mm lengths of 150mm Ø together (crimp down), with the shorter end to the bottom. Rivet each joint together with 3x SS rivets equally spaced.
2. Lower down through the Insulated Flue Starter 900 and through the 200mm Ø Black Liners, onto flue spigot.
3. Lift the 150mm Ø Flue and200mm Ø Black Liner up and support. Apply a continuous flue cement bead to the 150mm flue spigot and carefully lower back down both pipes. *Refer Sec. C13 for flue pipe restraint.*
4. Fit the final 150mm Ø x 1200mm length into place and fix 3x SS rivets equally spaced.

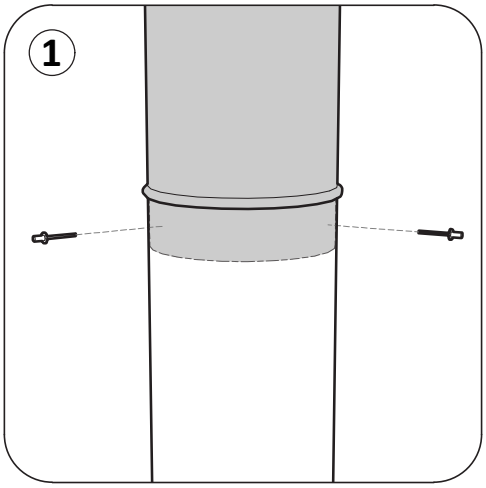

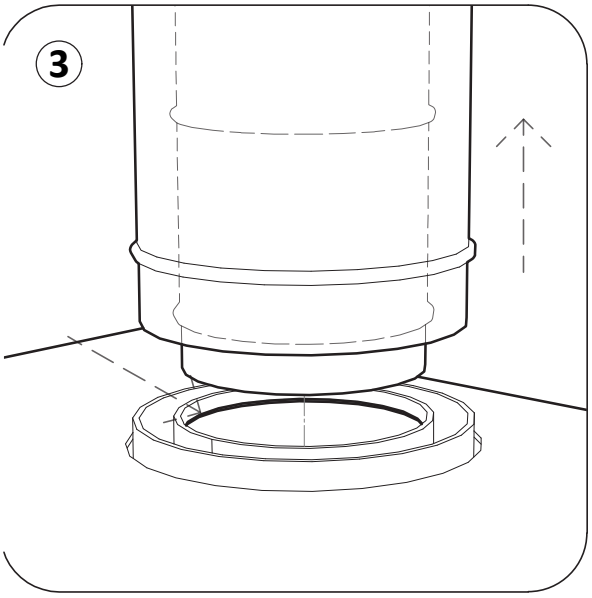

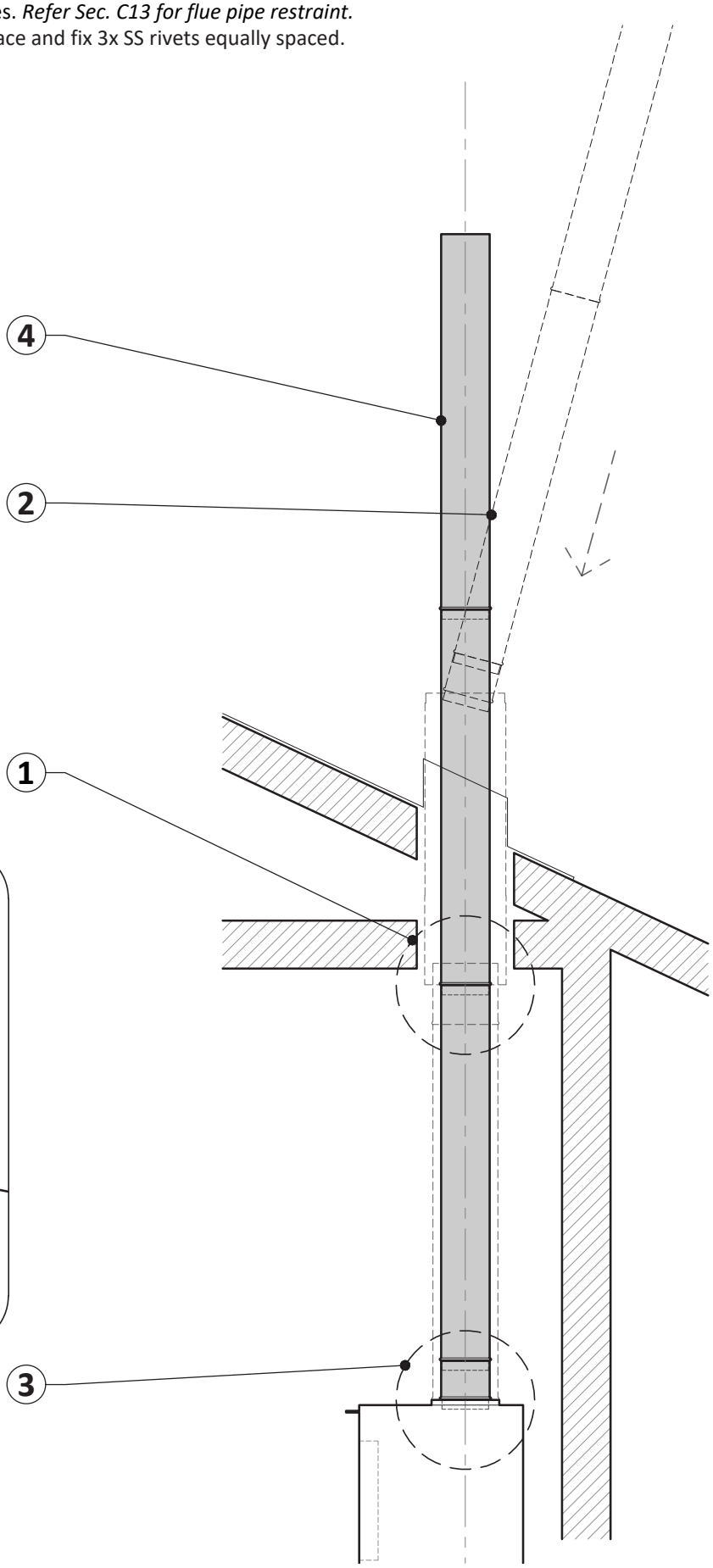

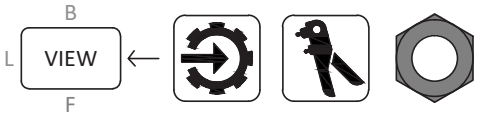

C12. FLUE INSTALLATION - STEP 4

1. Fit the the Insulated Flue Pipe 1200 to the final height required, crimp end up.
2. Fix using 3x SS Rivets, equally spaced.
3. Upon completion the 150mm Ø flue pipe should extend 20-250mm above the final Insulated Flue Pipe. Trim/extend where required. Add additional 1200/900/600/300mm long Insulated Flue Pipe and 150mm Ø flue pipe extensions where required.

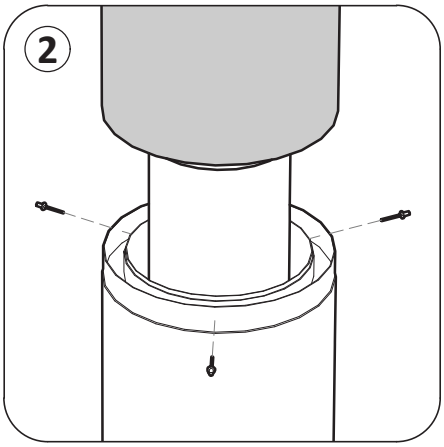

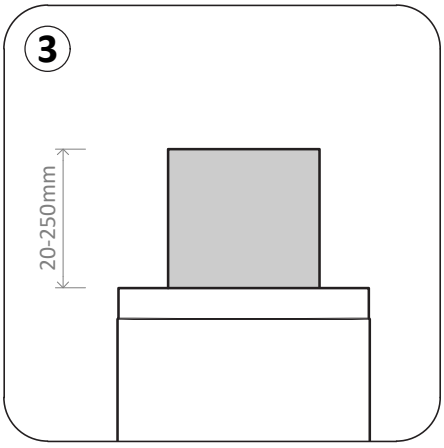

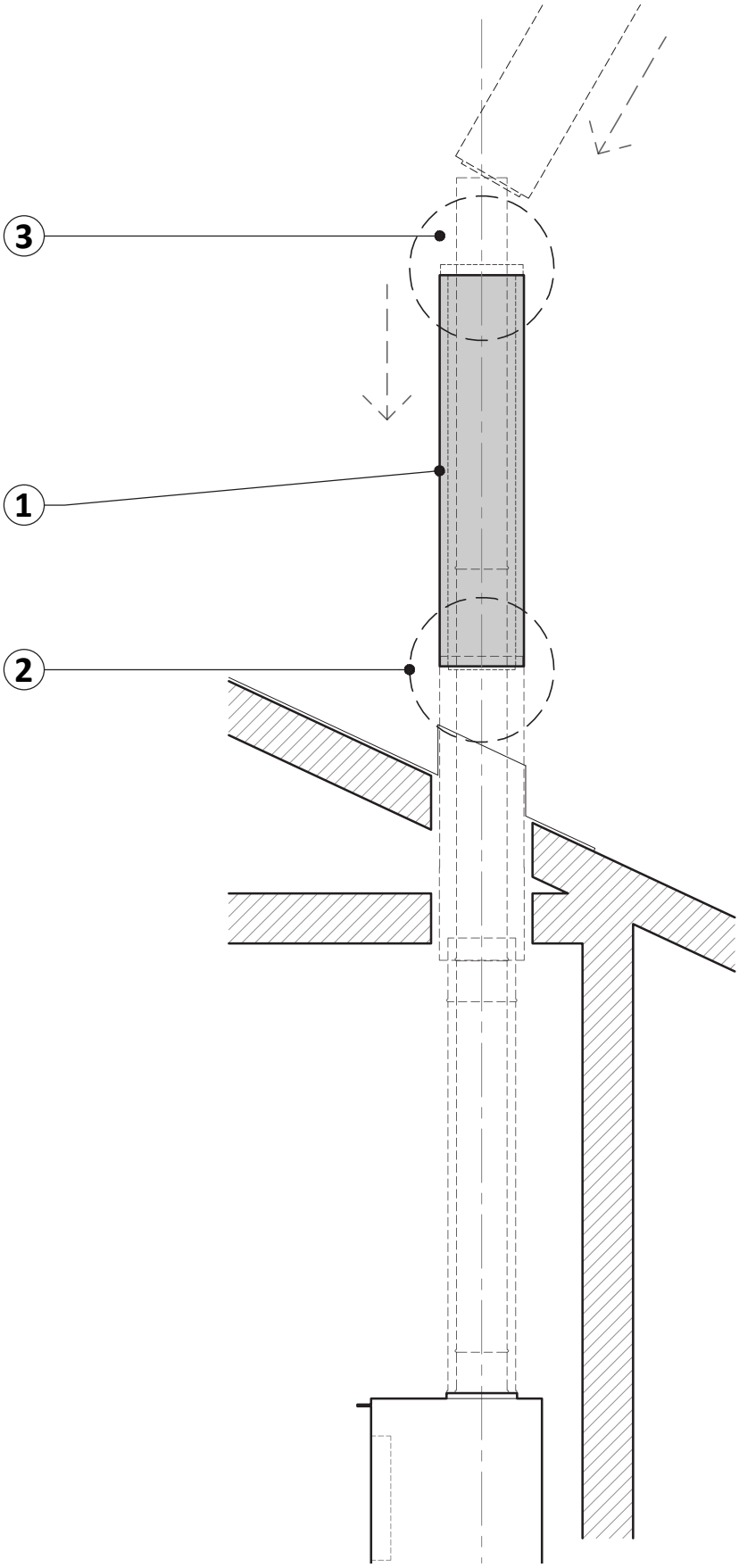

C13. COWL INSTALLATION

1. Fit the Insulated Flue Closure Bracket to the top of the Insulated Flue Pipe 1200. Fix using 3x SS Rivets, equally spaced.
2. Fit the cowl onto the 150mm Ø flue pipe, and align the holes in the outer shroud with the brackets on the insulated flue closure cap. Fix using the supplied hex head screws.

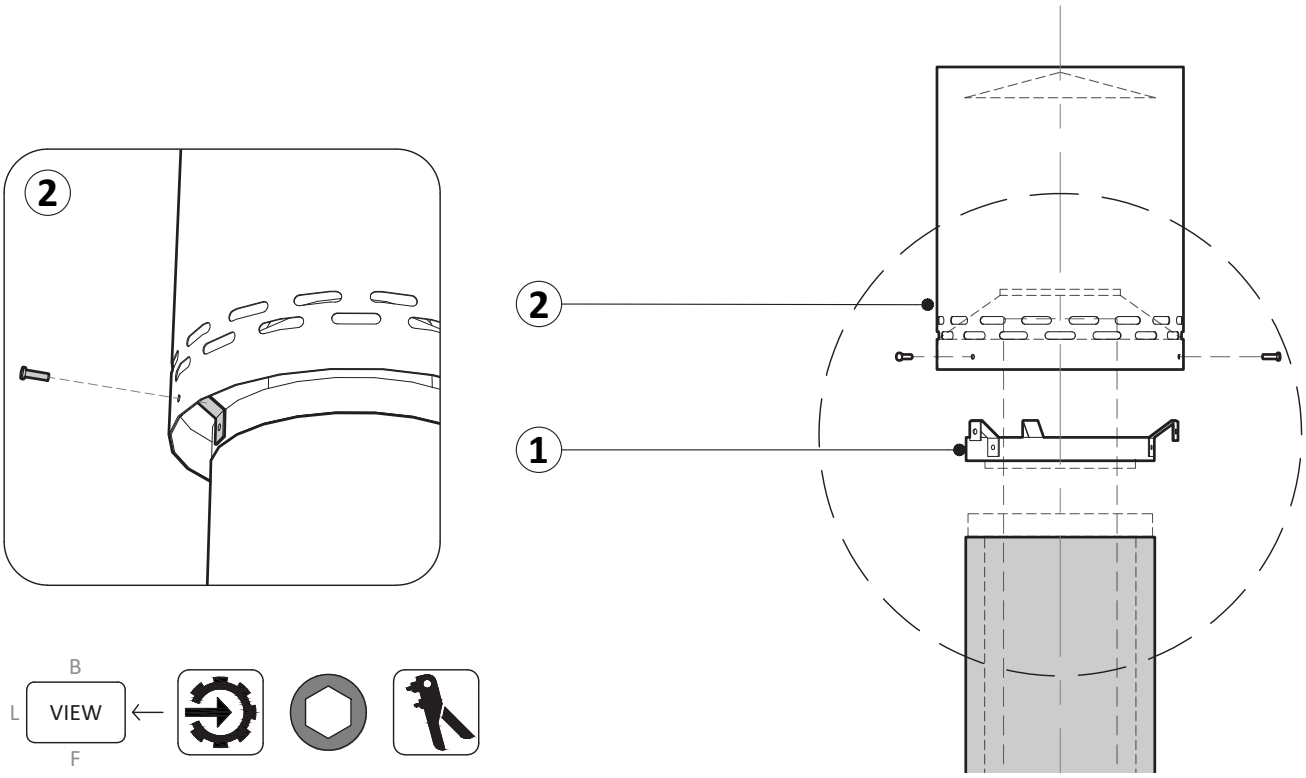

C14. FLUE RESTRAINT

1. Connect the flues to the flue spigot by drilling a 5mm pilot hole through the 200mm Ø black liner and the 150mm Ø SS flue, using the hole in the spigot as a guide.
2. Using an extension bit, screw through the 200mm Ø black liner and into the 150mm Ø SS flue, using the supplied 12G x 40 SS TEK screw.

**Access is between the outer wrap and above the door.*

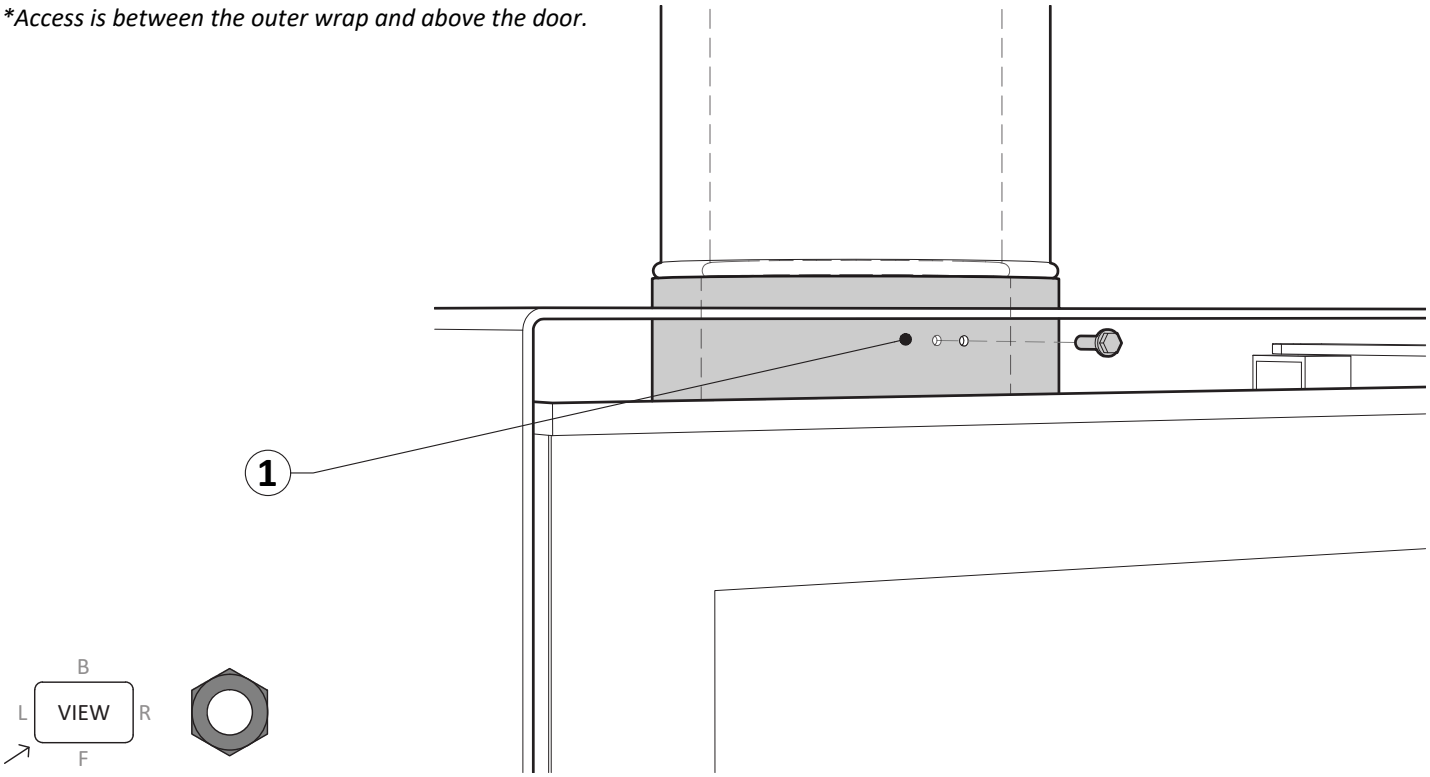

C15. FLASHING INSTALLATION

1. Upon installation of the Insulated Flue Starter Pipe (900) and extending above the roof surface, roof flashing's can be added. The specification and installation of the flue flashing is the responsibility of the Specifier and/or Installer.

**Example flashing plate shown below.*

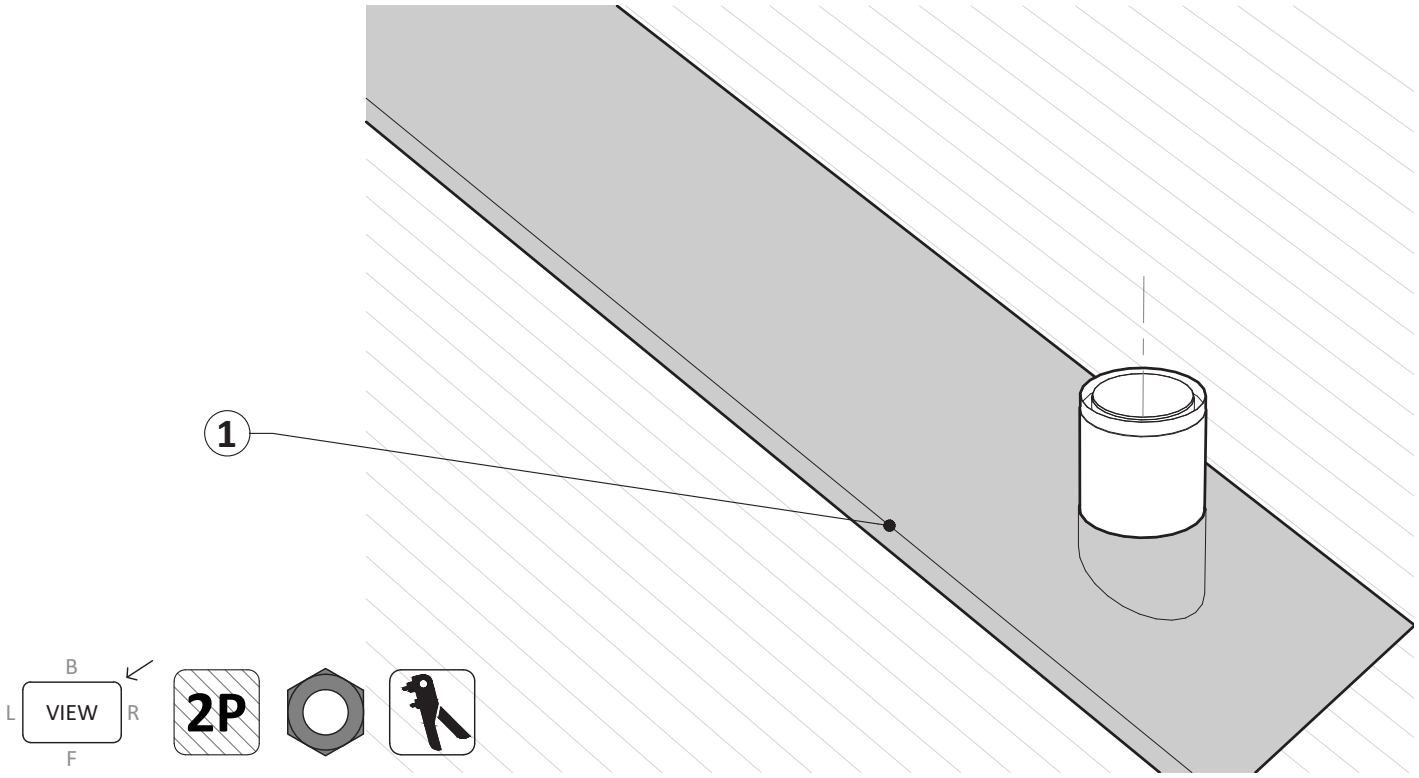

C16. ROOF MOUNTED FLUE STAYS

A flue extending above the roof, but not contained within a chimney, must be restrained at intervals not greater than 3m with compatible telescopic or fixed stays, in accordance with AS/NZS 2918, Clause 4.10. For best practice and improved performance, a **maximum spacing of 1.5m** is recommended, which reduces deflection to 1/16th of the 3m limit.

1. Fit stays at opposing angles back to the roof surface. Allow for thermal expansion when fitting brackets or stays.

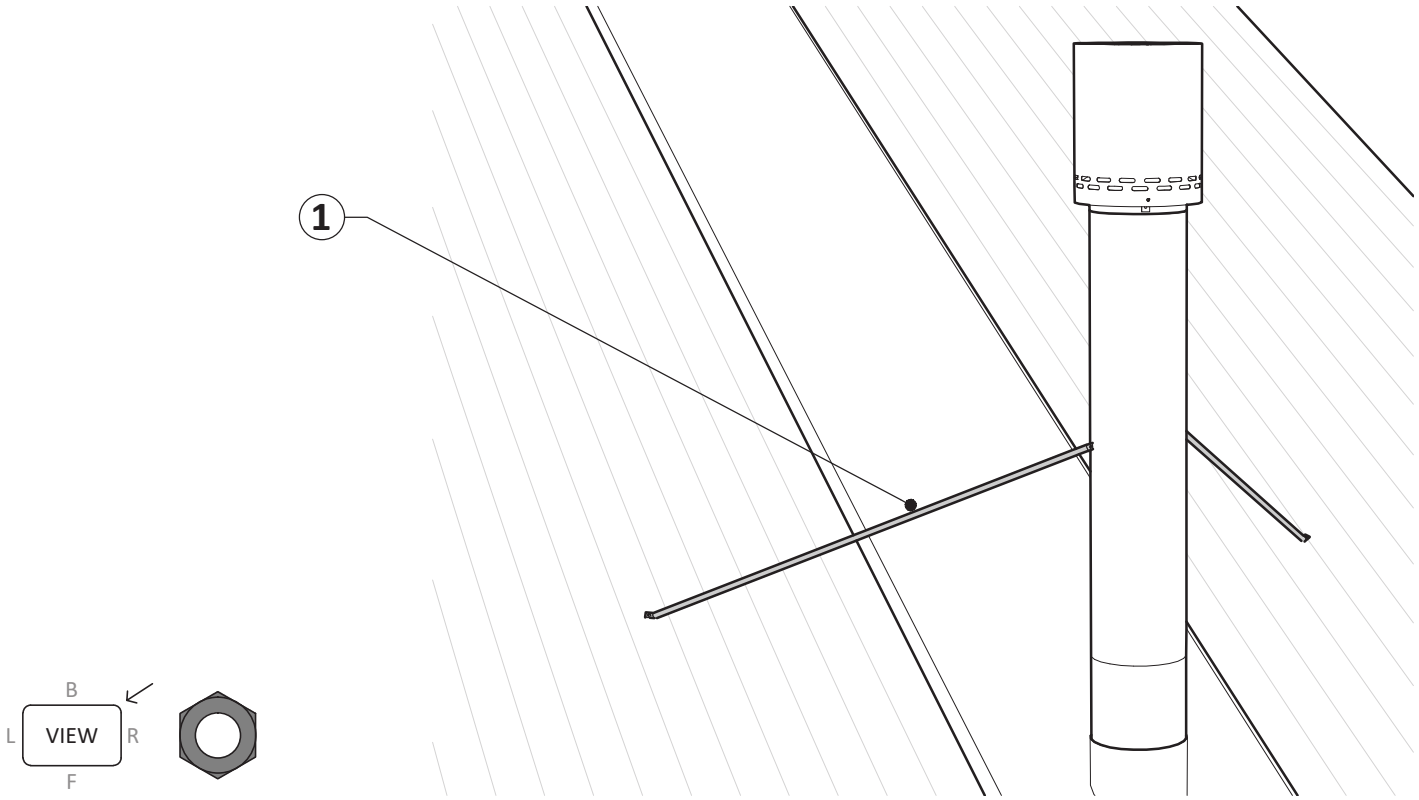

C17. FIREBRICK INSTALLATION

1. To install fire bricks, tilt top down, and slide brick upwards and under the ledge halfway up the firebox. Slide left or right into the final position.
2. Install rear firebricks.
3. Install LH firebricks and follow with RH Firebricks. *(bevel edge to face away from adjacent firebrick)*

Model	Side Bricks	Back Bricks
TFS650 MK2	4	2
TFS850 MK2		3
TFS1000 MK2		4

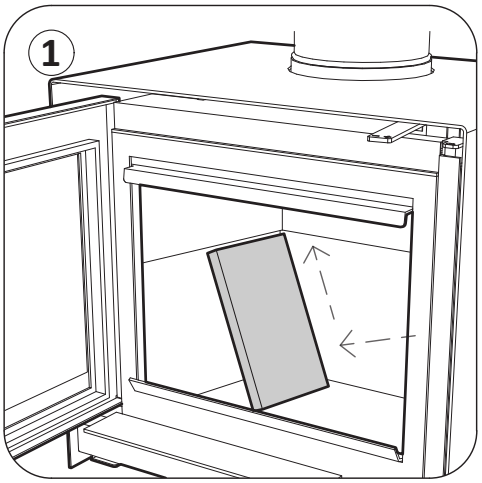

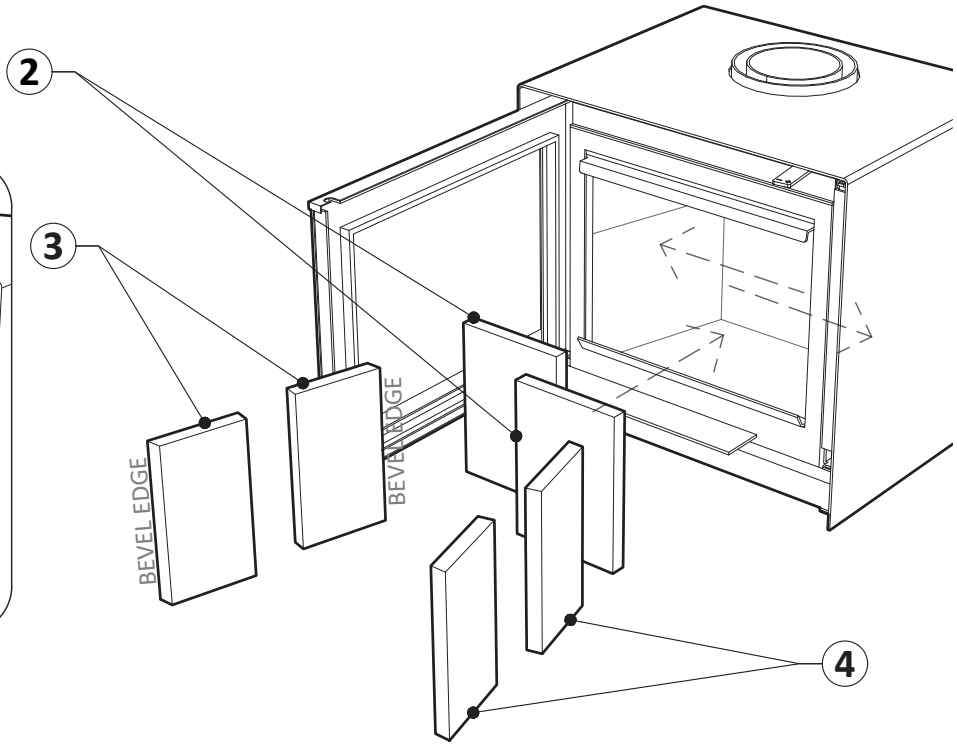

C18. BAFFLE POSITION CHECK

1. Ensure the firebox baffle is correctly in place by pushing the baffle backwards to have the back against the rear of the firebox. If not seated correctly, flue draw can be affected.
2. The gap shown below should be around 5mm.

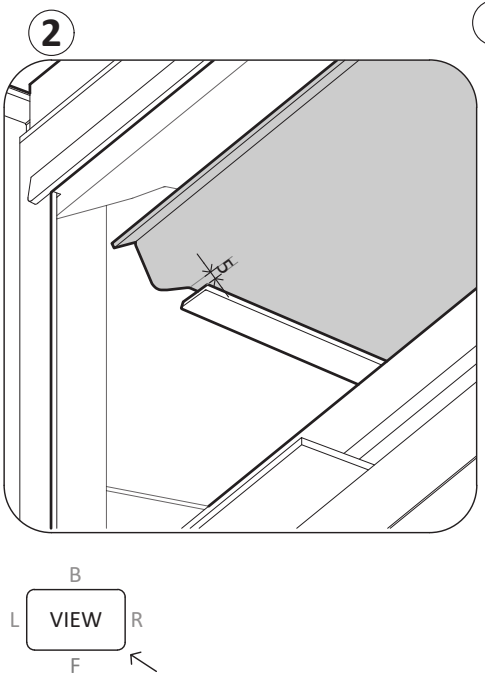

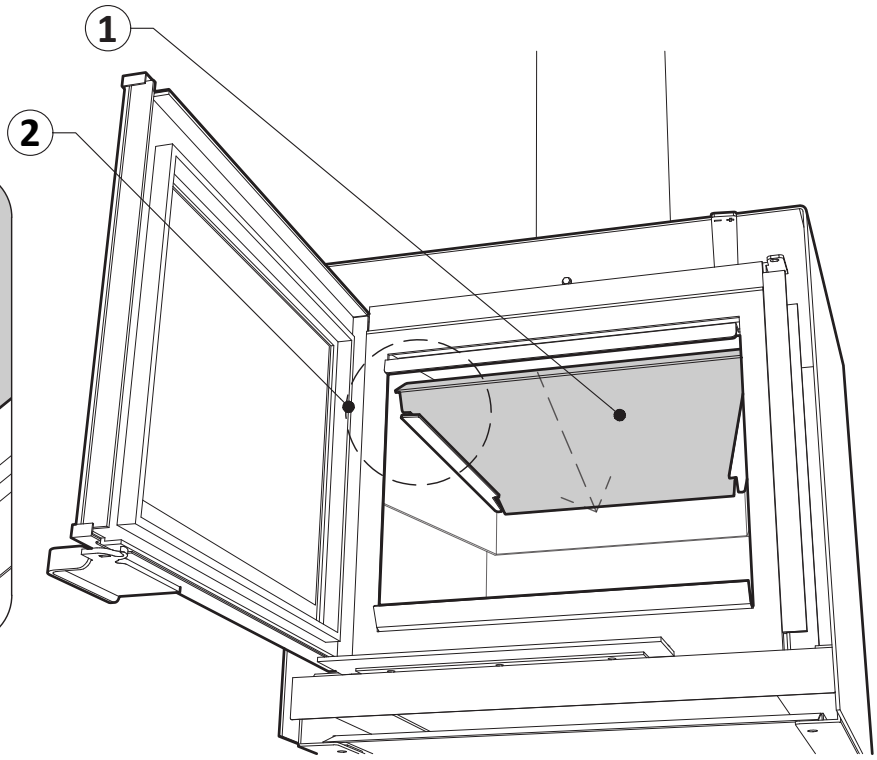

D CHECKLIST

Use this checklist to confirm that you have reviewed and applied all aspects of selecting and installing a TC600 Insert Wood Fireplace. For fireplace operation, refer to Escea Wood Fireplace Owners Manual.

INSTALLATION TASK	ROLE
◯ **Correctly supplied TFS650 MK2, TFS850 MK2 or TFS1000 MK2 Freestanding Wood Fireplace, with an Escea Freestanding Fireplace flue kit?**	Installer
◯ **Confirmed all parts and accessories are supplied to complete the installation.**	Builder
◯ **Established a fireplace location and flue path clear of obstructions.**	Installer
◯ **Established correct hearth size and configuration for the TFS MK2 Freestanding wood fireplace.**	Builder/ Installer
◯ **Selected the base or plinth, and confirmed it will support the weight of the TFS650 MK2, TFS850 MK2 or TFS1000 MK2 (approx. 250kg).**	Builder/ Installer
◯ **Applied the appropriate seismic restraint for the fireplace and base.**	Installer
◯ **Ensured all clearances to combustibles are met from the fireplace and the flue.**	Installer
◯ **Installed the freestanding flue kit to a min. of 4.6m and with all external clearances met.**	Installer
◯ **Both 150mm and 200mm flues mechanically fixed to the fireplace.**	Installer
◯ **Correct size ceiling plate fitted and sealed.**	Installer
◯ **Watertight roof flashings fitted.**	Installer
◯ **Roof stays installed where the flue extends above the roof line by more than 3m.**	Installer
◯ **Door seal confirmed in place and operating using paper seal test.**	Installer
◯ **All Fire-bricks installed in the correct orientation.**	Installer
◯ **Baffle correctly seated in the firebox.**	Installer
◯ **Door seal confirmed in place and operating using paper seal test.**	Installer
◯ **Explained recommended lighting procedure and operation to the owner.** *Refer to Indoor Wood Fire Owner's Manual.*	Installer

E APPENDIX

E1. FIREPLACE COMPONENTS

- 1x TFS650 MK2, TFS850 MK2, or TFS1000 MK2 Freestanding Wood Fireplace
- 1x Heat Resistant Gloves
- 1x Wood Fire Moisture Meter
- 4x (M8 x 50) Hex Head Bolt ZP
- 4x (M8 x 32) Flat Washer ZP
- 4x Nitrile Gloves
- 2x 12G x 40 Tek Screw (for Flue connection)

E2. FREESTANDING INSULATED FLUE KIT COMPONENTS

The Escea Freestanding Insulated Flue Kit is a direct-vent, insulated flue system. It is designed for use with all TFS MK2 Freestanding Wood Fireplaces. Each kit consists of:

- 3x (150mm Ø 1200mm) Stainless Steel Flue
- 2x (200mm Ø 1200mm) Stainless Steel Flue (Black)
- 1x (200/250mm Ø x 900) Insulated Flue Starter Pipe (Black)
- 1x (200/250mm Ø x 1200) Insulated Flue Pipe 1200 (Black)
- 1x Pillar Cowl Support Bracket (Black)
- 1x Pillar Cowl (Black)
- 1x Flat (0-10°) Ceiling Plate (Black)
- 4x Flue Bracing L-brackets
- NOTE: Rivets, Teks Screws are not provided.

E3. INSULATED FLUE EXTENSION KIT COMPONENTS

Insulated flue extension kits are available for longer flue runs or for use with offset kits. Kits are available in lengths of 1200mm, 900mm, 600mm, and 300mm. These may not be required on all installations. Each kit consists of:

- 1x 150mm Ø SS Flue (300, 600, 900 or 1200mm L)
- 1x 200/250mm Ø Insulated Flue Pipe - Black (300, 600, 900 or 1200mm L)

E4. DOUBLE SKIN FLUE EXTENSION KIT COMPONENTS

Double skin flue extension kits are available for extending the visible flue above the freestanding fireplace but below the ceiling. These may not be required on all installations. Each kit consists of:

- 1x (1200mm L x 150mm Ø) SS Flue
- 1x (1200mm L x 200mm Ø) Black Painted Flue Liner
- 1x Wood Fire Spider 150-200mm Ø

E5. SINGLE SKIN FLUE EXTENSION KIT COMPONENTS

Single skin flue extension kits are available for circumstances where the Escea Freestanding Insulated Flue Kit does not provide enough 150mm Ø Flue. As the insulated flue cannot be modified, a scenario may arise where the ceiling height is high (up to 3.3m) and the roof height is correspndingly low, leaving the installer short of 150mm Ø Flue. These may not be required on all installations. Each kit consists of:

- 1x (1200mm L x 150mm Ø) SS Flue

E6. 45° OFFSET - FLUE CUT LENGTH

Use the formula below to establish the cut length of the 150mm flue. The formula already takes into account the fixed portion of the offset. A 45° offset shifts the flue sideways by the horizontal offset, and over that section it rises by the same amount.

CUT LENGTH (MM) = (HORIZONTAL OFFSET × √2) – 349

Other pipe sizes (same method, different bend-leg constant):

200 mm Flue Liner = (offset × √2) − 269.

250 mm Flue Liner = (offset × √2) − 284.

The 1451 mm / 1273 mm maximum is the last compliant column.

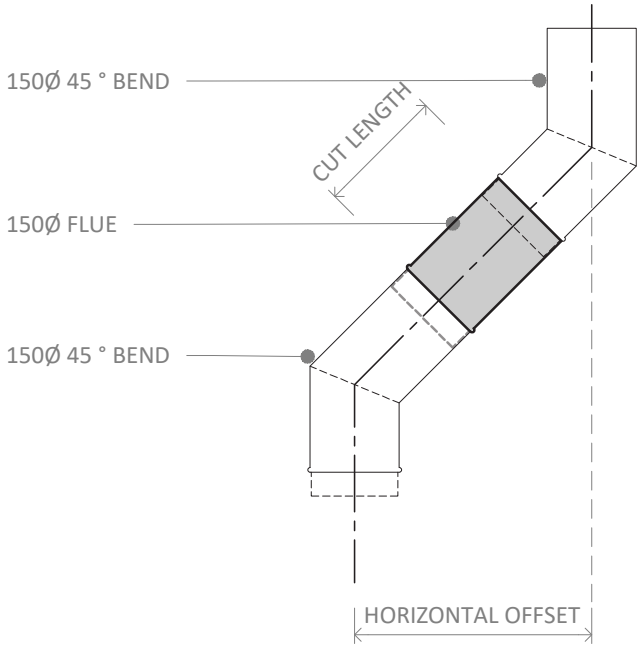

WORKED EXAMPLE - 600mm horizontal offset

150mm Flue = (600 x 1.4142) - 349

= 848.5 - 349

= **500mm**

CUT LENGTH TABLE - 150MM LINER

Horizontal Offset (mm)	300	400	500	600	700	800	900	1000	1100	1200	1273
Cut Length (mm)	75	217	358	500	641	782	924	1065	1207	1348	1451

- *A horizontal offset of 1273 mm equates to the maximum 1800mm offset length, under AS/NZS 2918.*
- *Min. Horizontal offset below 247 mm is too small for a 45° pair —refer to the Escea Architectural Advisory Team.*

E7. 45° OFFSET - MINIMUM OFFSET CALCULATION

In a Double Skin or Triple Skin flue configuration, to achieve the minimum offset, the 150 mm and 250 mm Ø bends are trimmed to achieve the minimum offset possible.

The 200 mm Ø bend does not require any modification.

MINIMUM HORIZONTAL OFFSET = 190MM

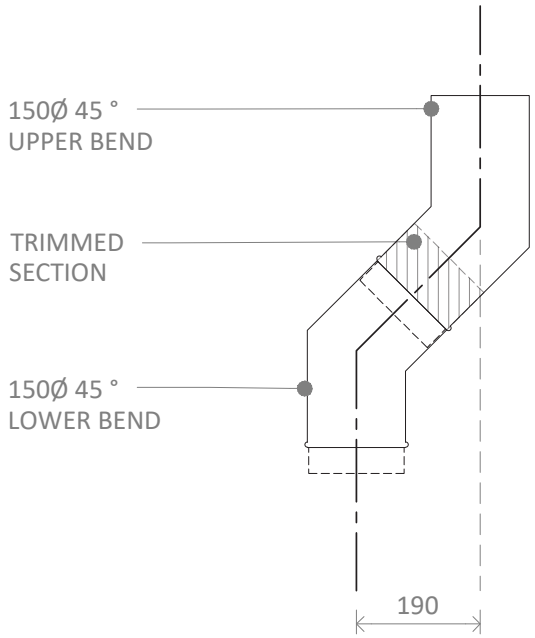

150MM ø LOWER BEND = TRIM 81MM OFF THE NON-CRIMP END

200MM ø BEND = NO MODIFICATION

250MM ø UPPER BEND = TRIM 11MM OFF THE NON-CRIMP END

E8. DESIGNER PLINTH BASE FIXING

The Designer Plinth (GRC) requires the use of the 2x supplied fixing brackets, described in Sec. C3, to restrain the plinth to the floor.

1. Following the dimensions below locate 2x 6mm holes in the plinth back panel.
2. Fit bracket to the plinth back panel using M6 x 40 Bolts, Washer and Nut (not supplied).
3. Position the plinth in the desired location, and mark out the holes for the floor. Remove plinth and drill holes.
4. Fix the bracket to the floor using 2x M6 fixings,suitable for the base material, into a structural component.

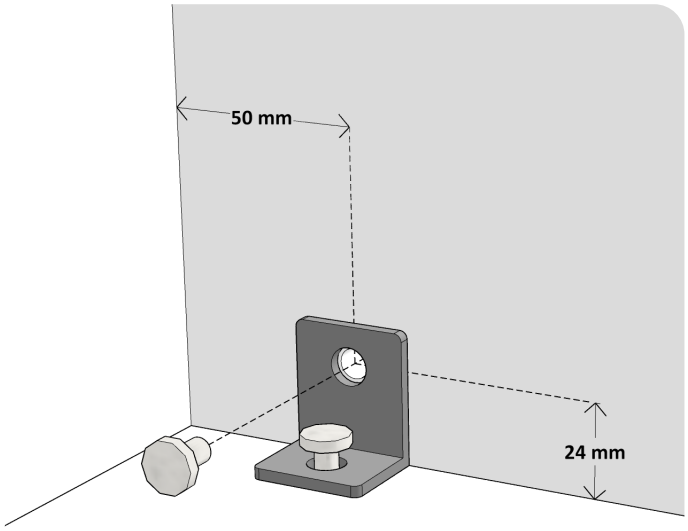

This page is intentionally blank.